As Built Documentation

Chapter 5.5.1 Logic diagrams

- Function diagram
  Hardware logic
- Function diagrams

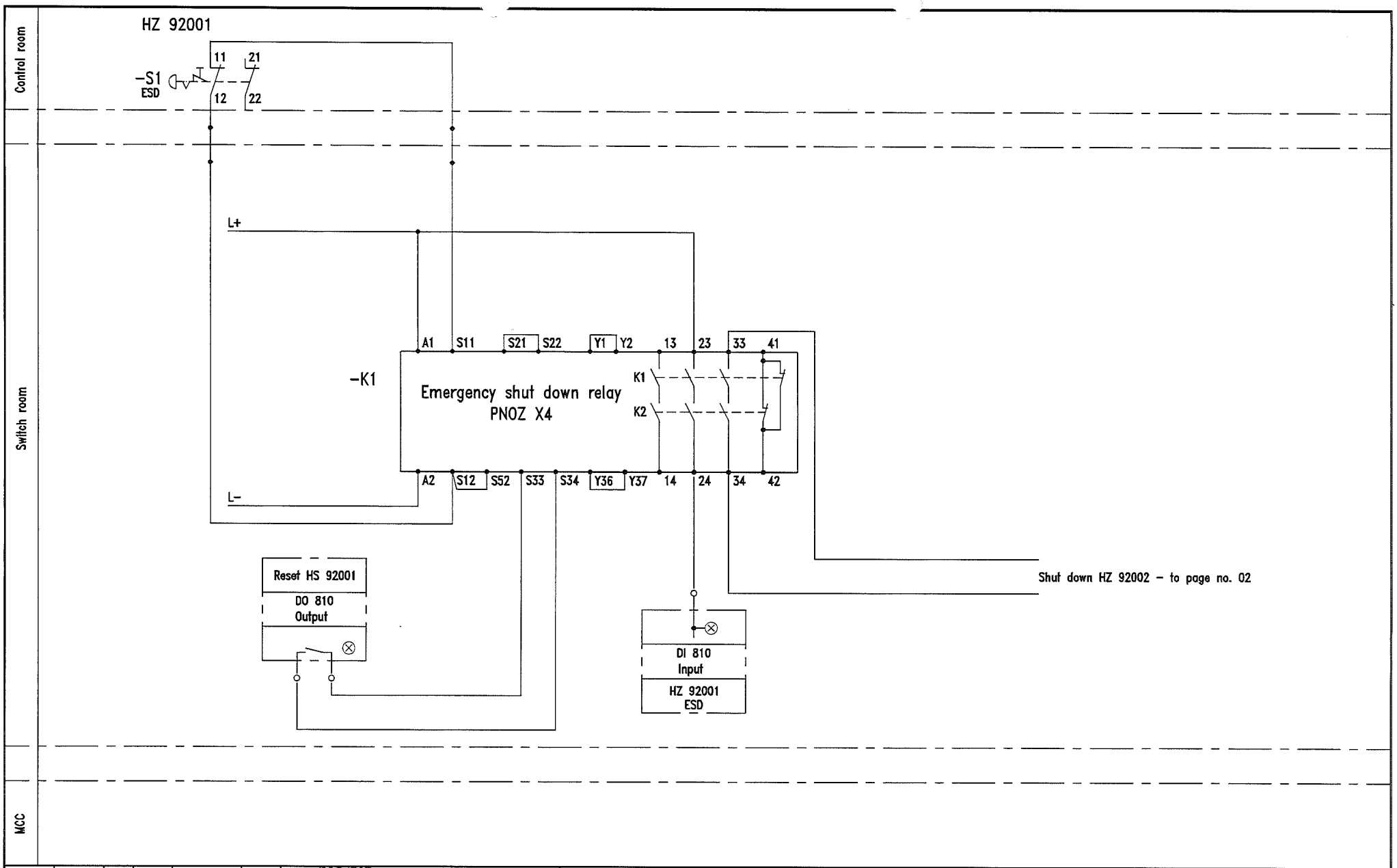

							PROJECT NAME	ASU KOSICE	AIR LIQUIDE	DRAWING NAME: HARDWARE LOGIC	SIZE A3	FUNKTION DIAGRAM
							PLANT PART	TOTAL PLANT	Air Liquide AGS GmbH Fütingsweg 34 47805 Krefeld	EMERGENCY SHUT DOWN TOTAL PLANT HZ 92001	DRWG. NO.	K70101_HW_01.dwg
JOB NO.	FILE NO	REV.	DATE	REVISIONS	BY	CHKD.					PROJ. NO.	K70101
											REPLACES:	REPLACED BY:

DATE	17.06.2005
AUTHOR	Frohn
CHECK	Eichler
STD.	
Page no. 01	
Of	10 Pages
BASED:	

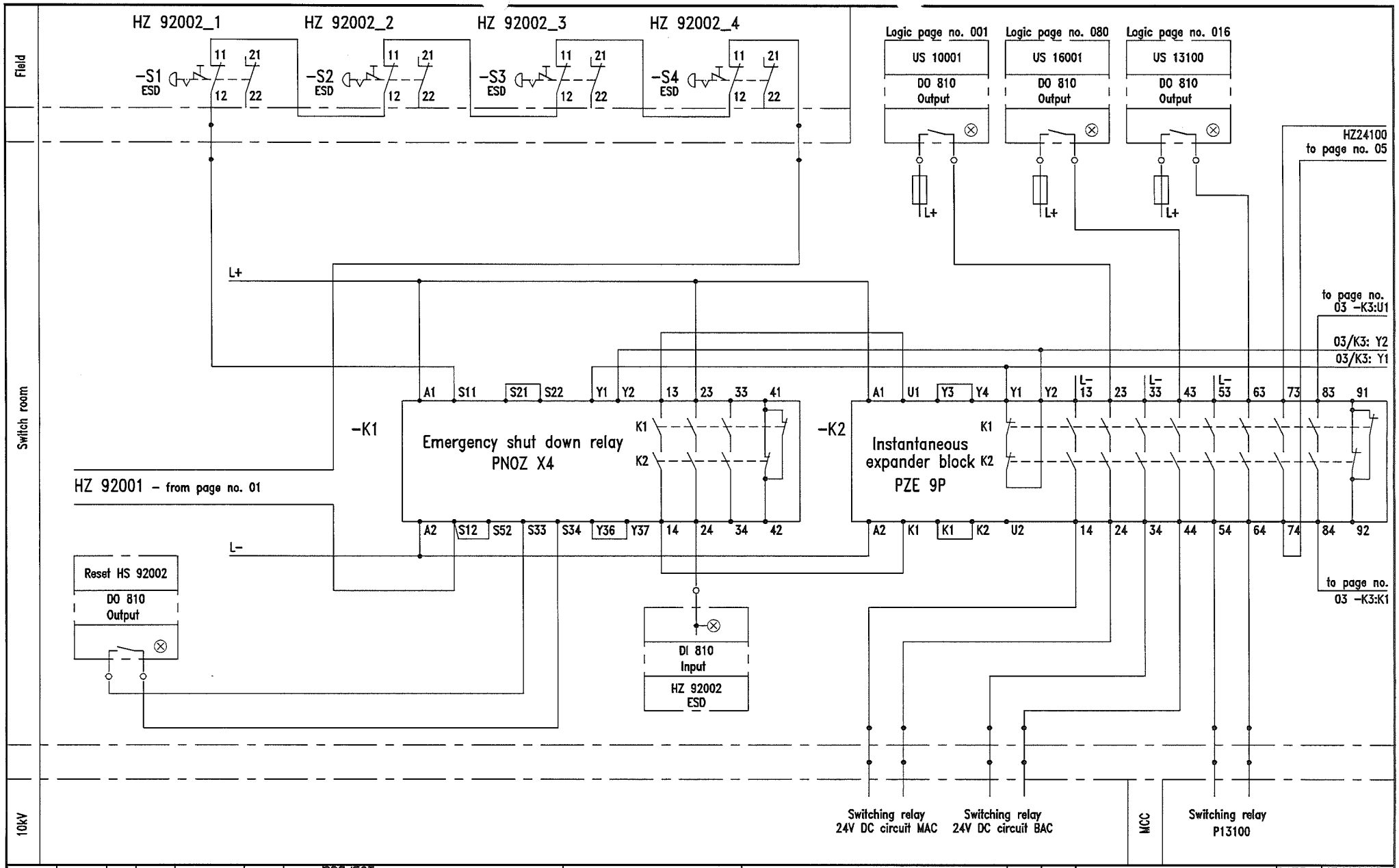

JOB NO.	FILE NO	REV.	DATE	REVISIONS	BY	CHKD.	PROJECT NAME: ASU KOSICE	AIR LIQUIDE	DRAWING NAME: HARDWARE LOGIC	SIZE A3	FUNKTION DIAGRAM	DATE 17.06.2005	AUTHOR Frohn
												CHECK Eichler	STD.
							PLANT PART: ENGINE HOUSE	Air Liquide AGS GmbH Fütingsweg 34 47805 Krefeld	EMERGENCY SHUT DOWN HZ92002 ENGINE HOUSE	DRWG. NO. K70100_HW_002.dwg		Page no. 02	
										PROJ. NO. K70101		Of 10 Pages	
										REPLACES:	REPLACED BY:	BASED:	

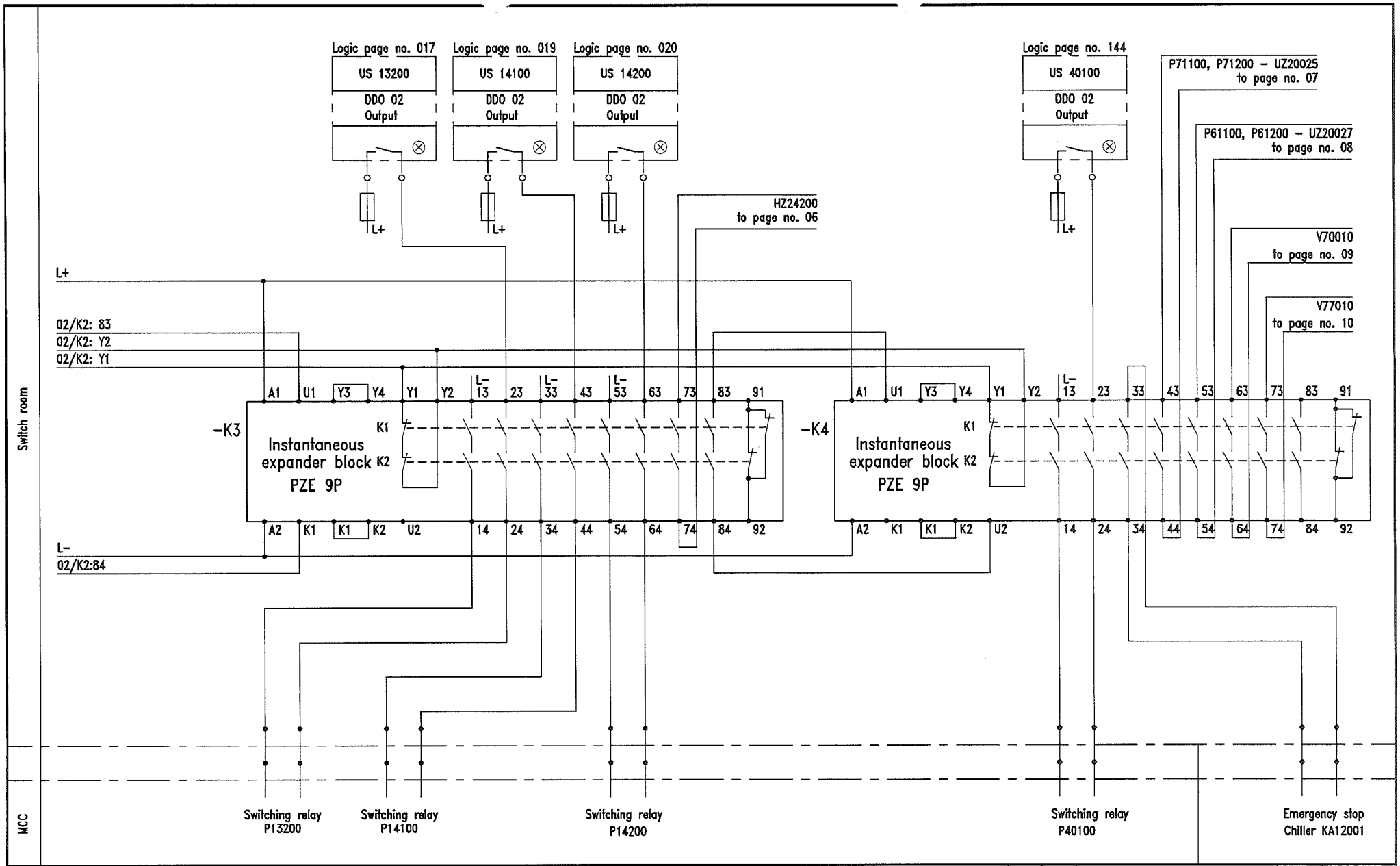

							PROJECT NAME	ASU KOSICE	AIR LIQUIDE	DRAWING NAME: HARDWARE LOGIC	SIZE A3	FUNKTION DIAGRAM	DATE 17.06.2005
													AUTHOR Frohn
													CHECK Eichler
													STD.
							PLANT PART	ENGINE HOUSE	Air Liquide AGS GmbH Fütingsweg 34 47805 Krefeld	EMERGENCY SHUT DOWN HZ92002 ENGINE HOUSE	DRWG. NO.	K70100_HW_003.dwg	
											PROJ. NO.	K70101	Page no. 03
JOB NO.	FILE NO	REV.	DATE	REVISIONS	BY	CHKD.					REPLACES:	REPLACED BY:	Of 10 Pages
													BASED:

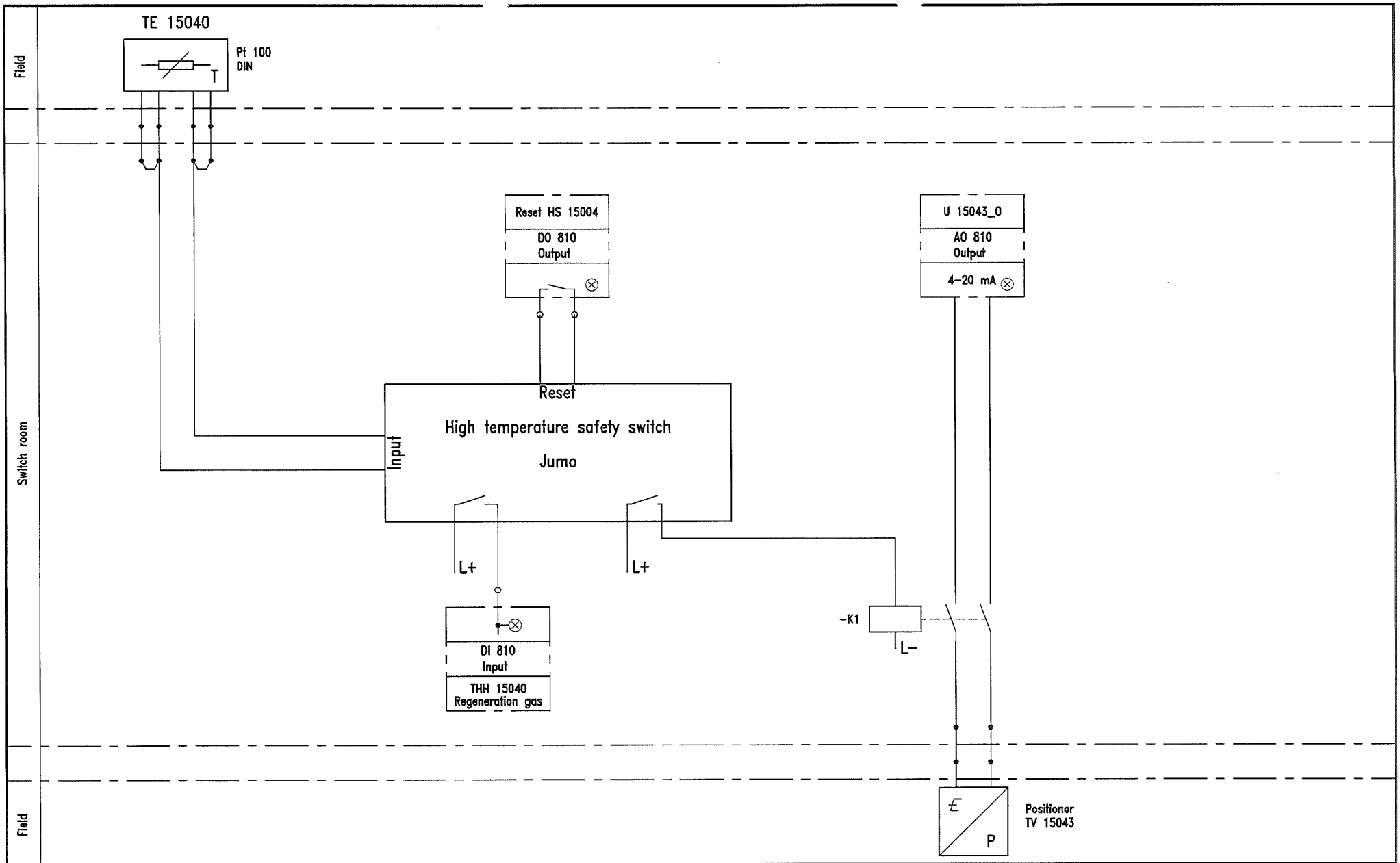

JOB NO.	FILE NO.	REV.	DATE	REVISIONS	BY	CHKD.	PROJECT NAME	ASU KOSICE	AIR LIQUIDE	DRAWING NAME: HARDWARE LOGIC	SIZE A3	FUNKTION DIAGRAM
							PLANT PART	MOL SIEVE	Air Liquide AGS GmbH Fütingsweg 34 47805 Krefeld	REGENERATION GAS HEATER STEAM THZ 15040	DRWG. NO.	K70101_HW_04.dwg
											PROJ. NO.	K70101
											REPLACES:	REPLACED BY:

DATE	17.06.2005
AUTHOR	Frohn
CHECK	Eichler
STD.	
Page no.	04
Of	10 Pages
BASED:	

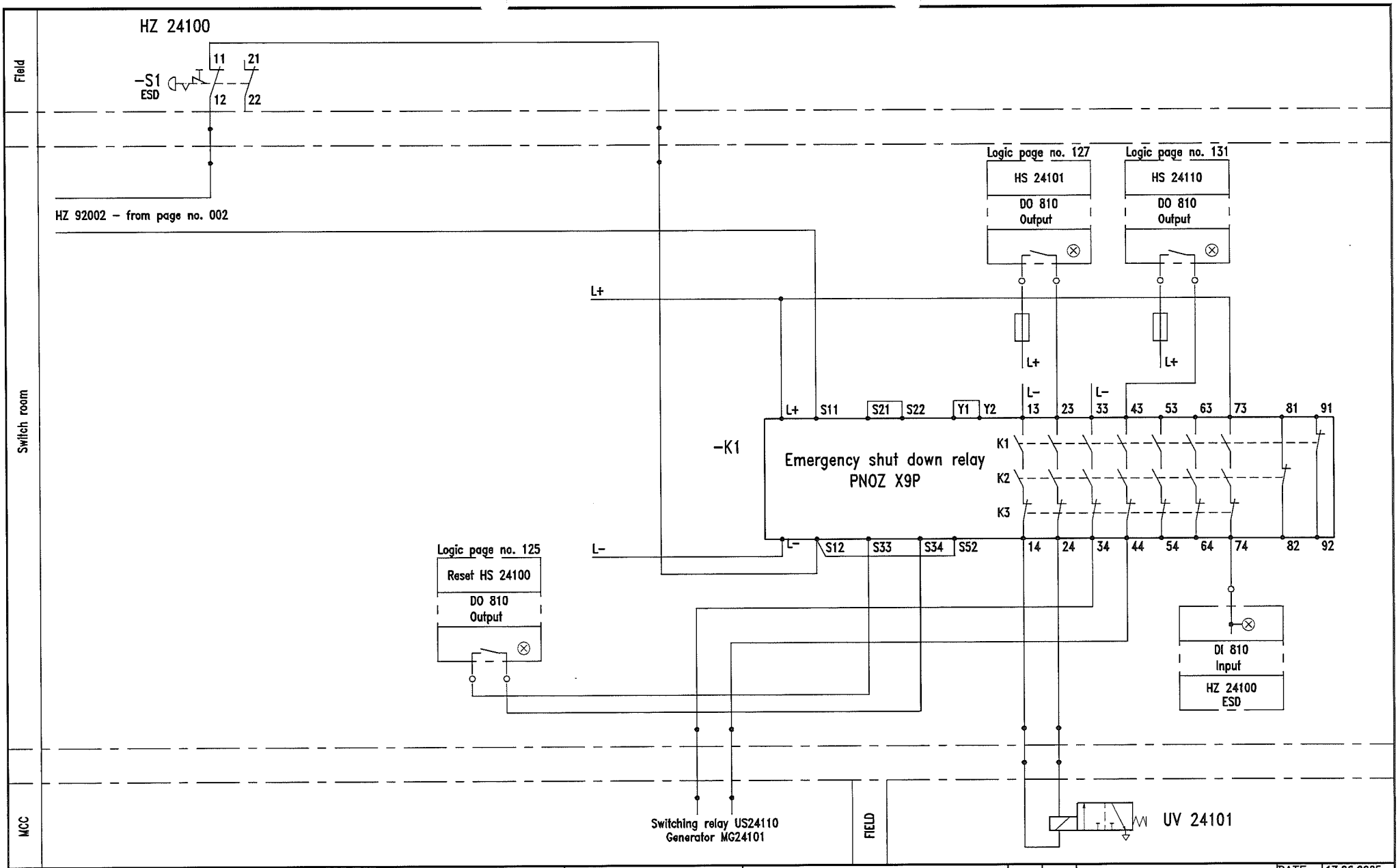

JOB NO.	FILE NO	REV.	DATE	REVISIONS	BY	CHKD.	PROJECT NAME: ASU KOSICE	AIR LIQUIDE	DRAWING NAME: HARDWARE LOGIC	SIZE A3	FUNKTION DIAGRAM	DATE 17.06.2005
												AUTHOR Frohn
												CHECK Eichler
										DRWG. NO.	K70101_HW_05.dwg	STD.
							PLANT PART: EXPANDER	Air Liquide AGS GmbH Fütingsweg 34 47805 Krefeld	EMERGENCY SHUT DOWN HZ24100 EXPANDER TURBINE ET24101	PROJ. NO.	K70101	Page no. 05 of 10 Pages
										REPLACES:	REPLACED BY:	BASED:

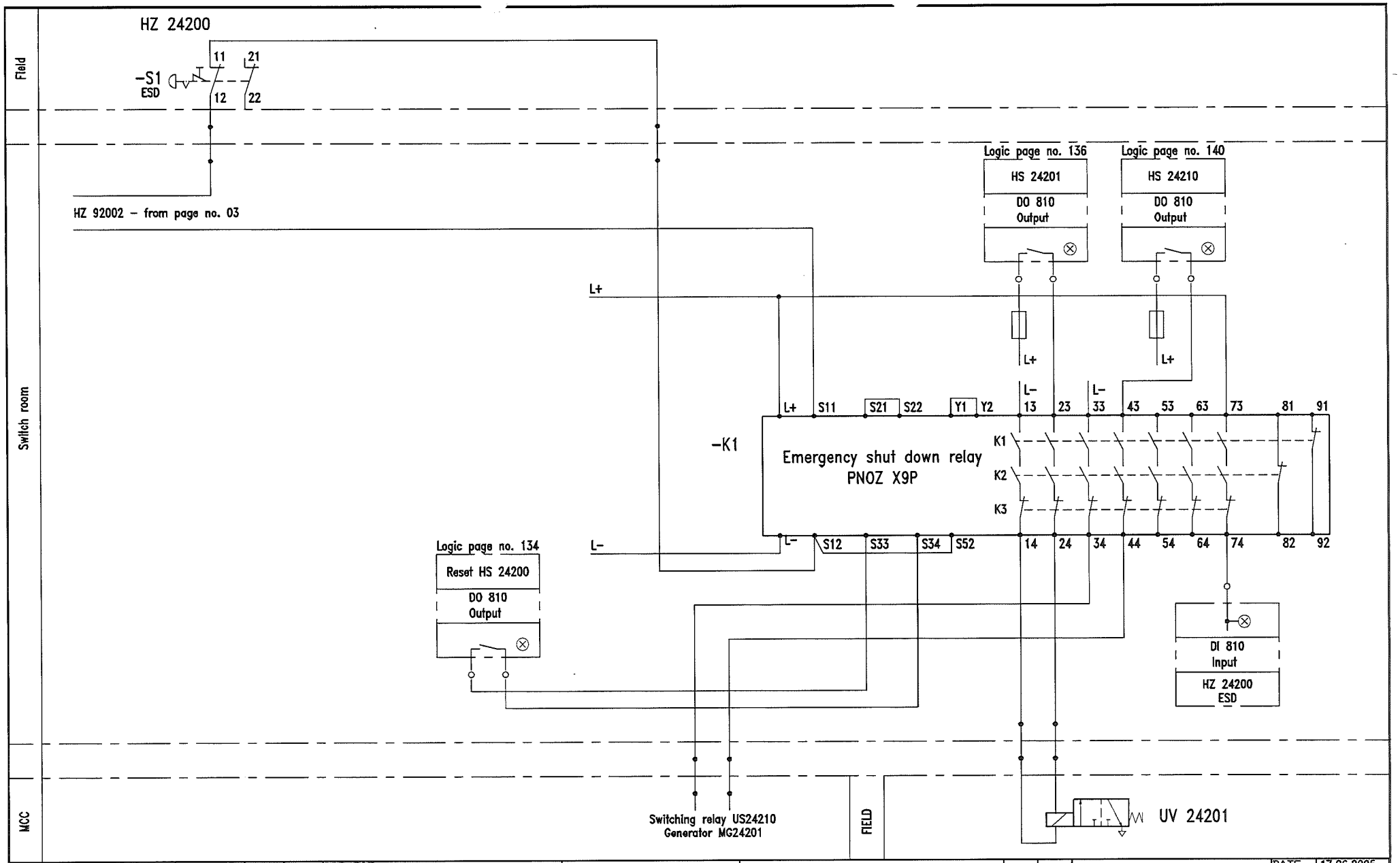

JOB NO.	FILE NO.	REV.	DATE	REVISIONS	BY	CHKD.

PROJECT NAME: ASU KOSICE

PLANT PART: EXPANDER

AIR LIQUIDE

Air Liquide AGS GmbH
Fütingsweg 34
47805 Krefeld

DRAWING NAME: HARDWARE LOGIC

EMERGENCY SHUT DOWN HZ24200
EXPANDER TURBINE ET24201

SIZE: A3

FUNKTION DIAGRAM

DRWG. NO.: K70101_HW_06.dwg

PROJ. NO.: K70101

REPLACES: REPLACED BY:

DATE: 17.06.2005
AUTHOR: Frohn
CHECK: Eichler
STD.:

Page no. 06
Of 10 Pages

BASED:

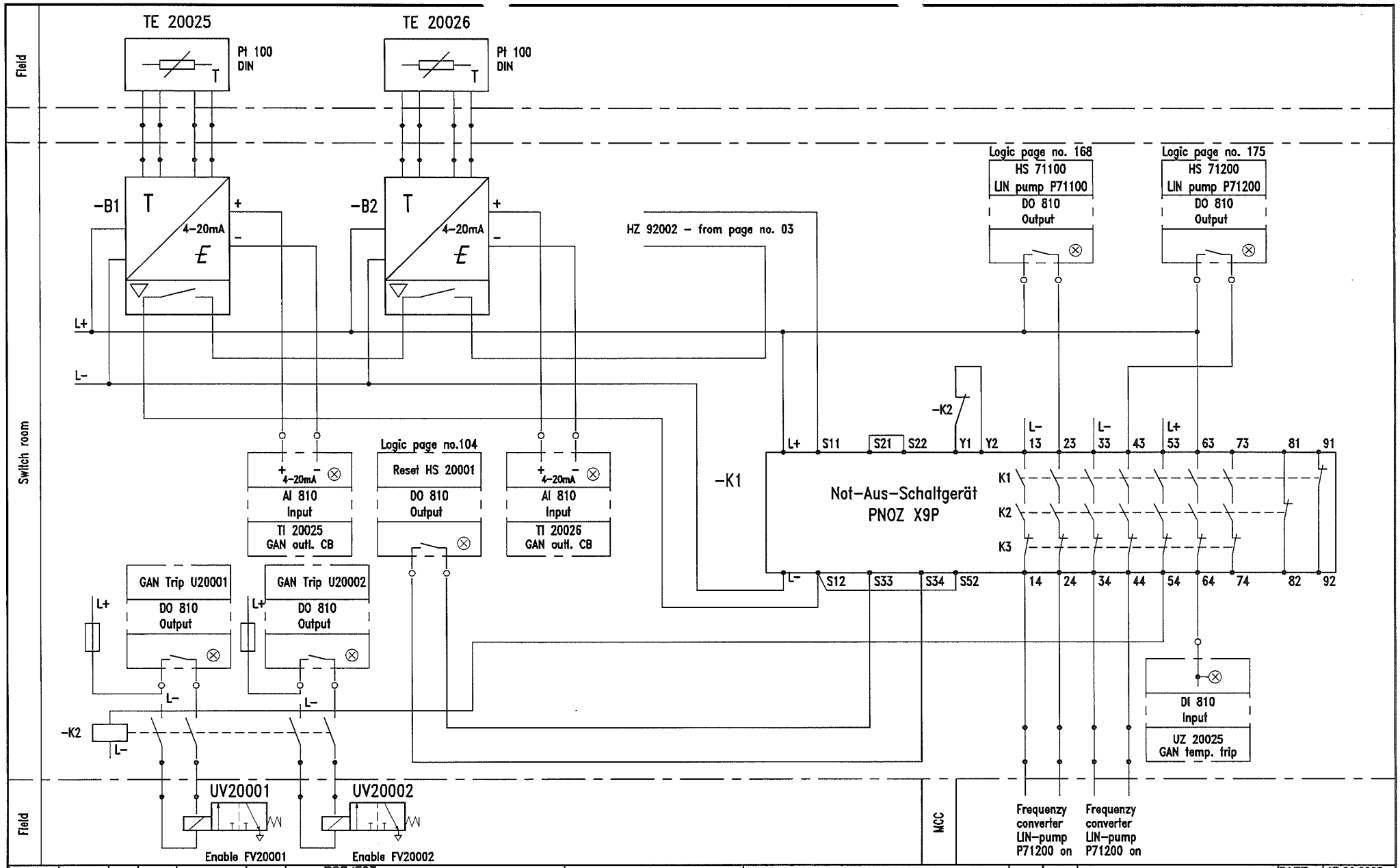

JOB NO.	FILE NO.	REV.	DATE	REVISIONS	BY	CHKD.

PROJECT NAME: ASU KOSICE

PLANT PART: COLD BOX

AIR LIQUIDE

Air Liquide AGS GmbH
Fütingsweg 34
47805 Krefeld

DRAWING NAME: HARDWARE LOGIC

GAN TEMPERATURE TRIP TZLL20025
INTERLOCK LIN PUMPS P71100/200

SIZE: A3

FUNKTION DIAGRAM

DRWG. NO.: K70101_07.dwg

PROJ. NO.: K70101

REPLACES: REPLACED BY:

DATE: 17.06.2005
AUTHOR: Frohn
CHECK: Eichler
STD.:

Page no. 07
Of 10 Pages

BASED:

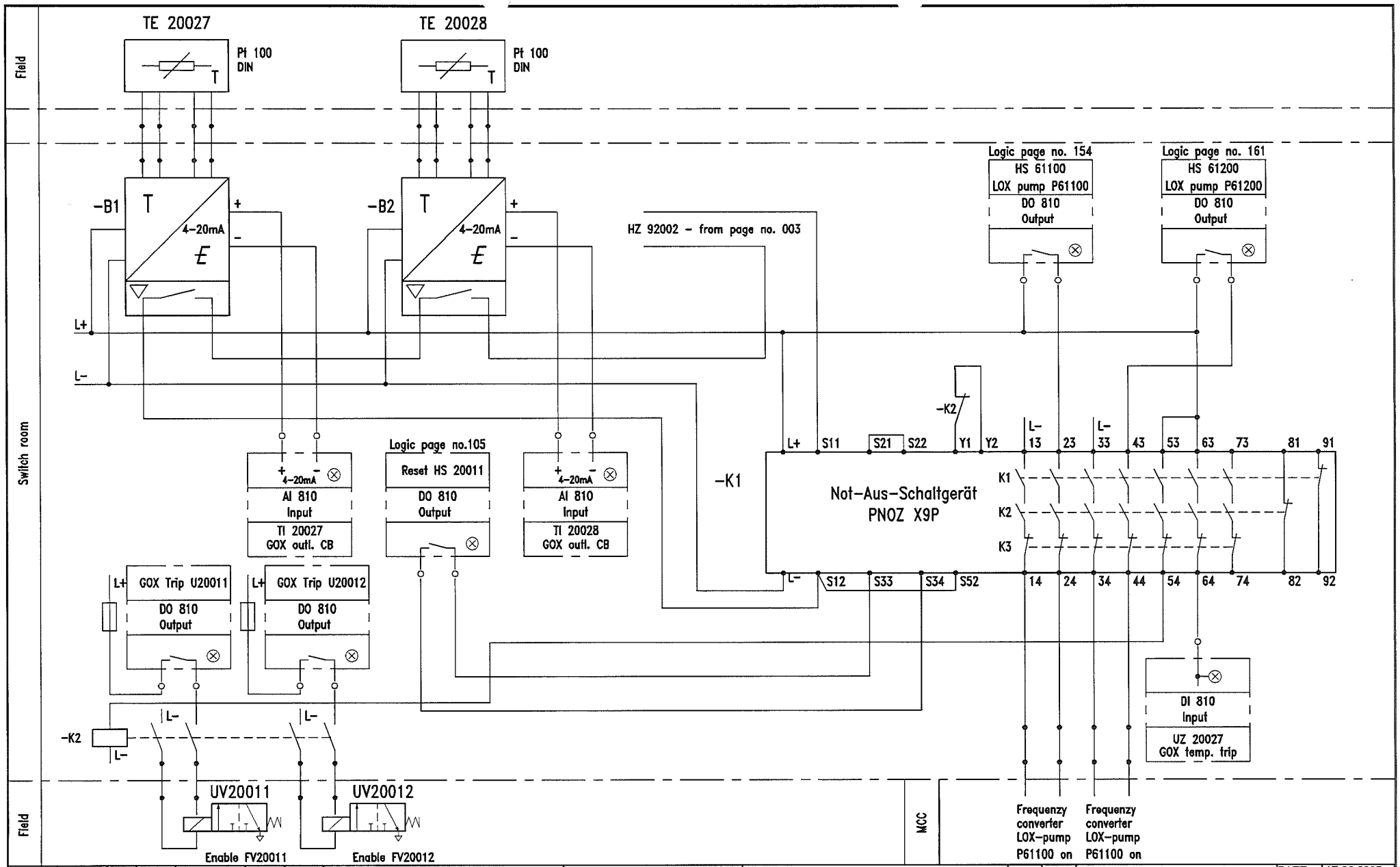

JOB NO.	FILE NO	REV.	DATE	REVISIONS	BY	CHKD.

PROJECT NAME: ASU KOSICE

PLANT PART: COLD BOX

AIR LIQUIDE

Air Liquide AGS GmbH
Fütingsweg 34
47805 Krefeld

DRAWING NAME: HARDWARE LOGIC

GOX TEMPERATURE TRIP TZLL20027
INTERLOCK LOX PUMPS P61100/200

SIZE: A3

FUNKTION DIAGRAM

DRWG. NO.: K70101_HW_08.dwg

PROJ. NO.: K70101

REPLACES: REPLACED BY: BASED:

DATE: 17.06.2005
AUTHOR: Frohn
CHECK: Eichler
STD.:

Page no. 08
Of 10 Pages

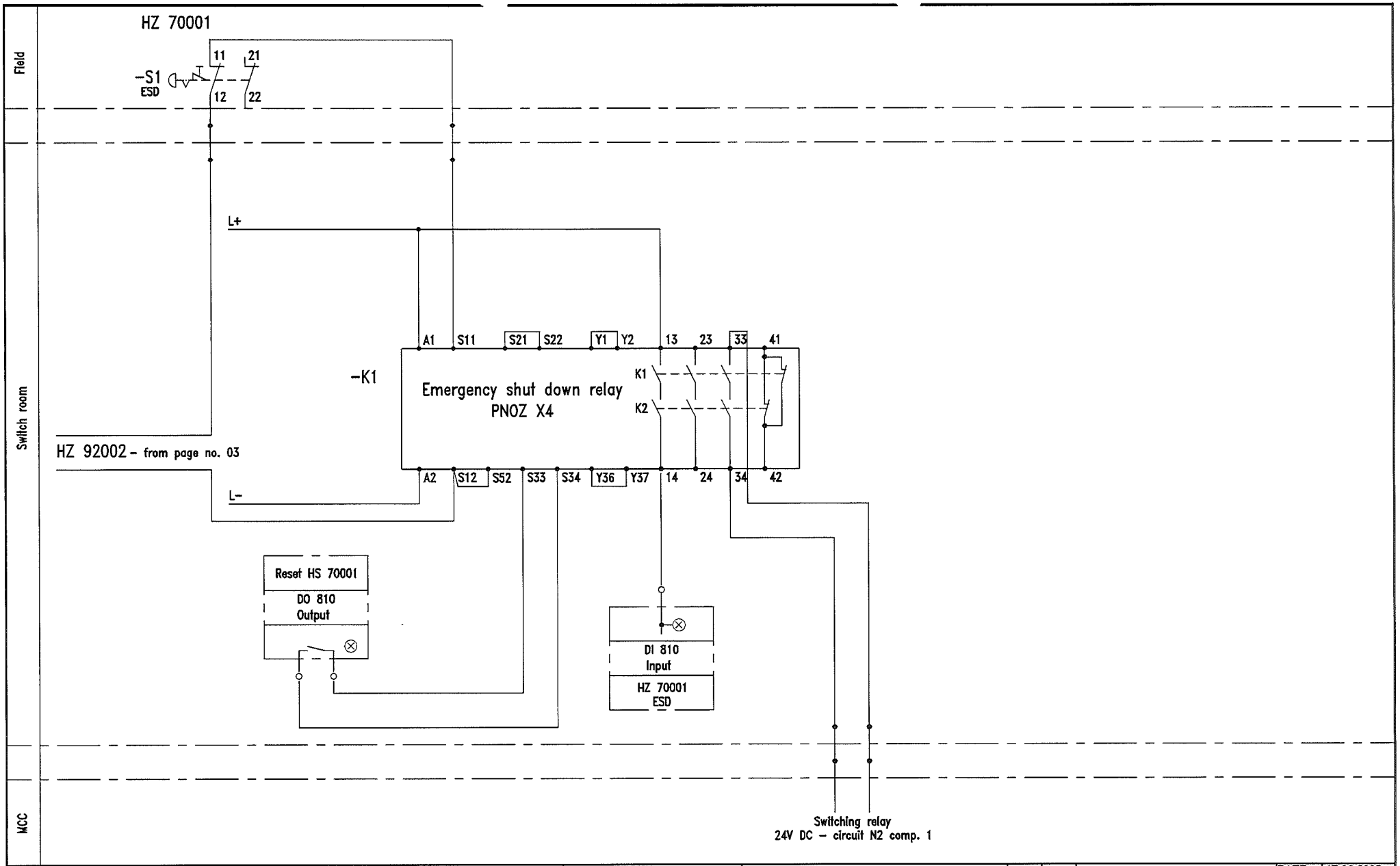

							PROJECT NAME	ASU KOSICE	AIR LIQUIDE	DRAWING NAME: HARDWARE LOGIC	SIZE A3	FUNKTION DIAGRAM	DATE 17.06.2005
													AUTHOR Frohn
													CHECK Eichler
											DRWG. NO.	K70101_HW_09.dwg	STD.
							PLANT PART	NITROGEN COMPRESSORS	Air Liquide AGS GmbH Fütingsweg 34 47805 Krefeld	EMERGENCY SHUT DOWN N2 COMPRESSOR 1 - HZ 70001	PROJ. NO.	K70101	Page no. 09 Of 10 Pages
JOB NO.	FILE NO	REV.	DATE	REVISIONS	BY	CHKD.					REPLACES:	REPLACED BY:	BASED:

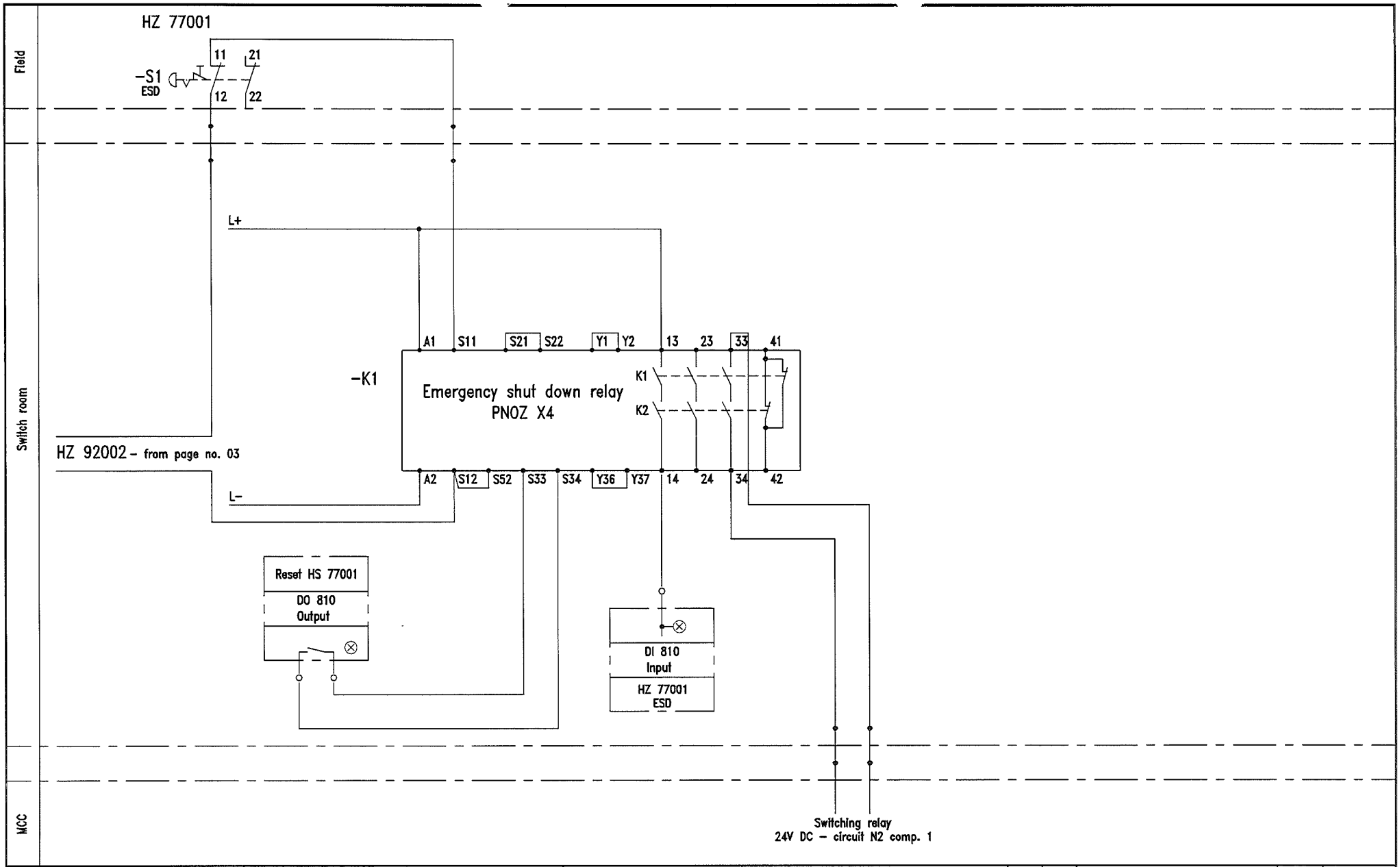

							PROJECT NAME	ASU KOSICE	AIR LIQUIDE	DRAWING NAME: HARDWARE LOGIC	SIZE A3	FUNKTION DIAGRAM	DATE 17.06.2005
													AUTHOR Frohn
													CHECK Eichler
											DRWG. NO.	K70101_HW_10.dwg	STD.
							PLANT PART	NITROGEN COMPRESSORS	Air Liquide AGS GmbH Fütingsweg 34 47805 Krefeld	EMERGENCY SHUT DOWN N2 COMPRESSOR 2 - HZ 77001	PROJ. NO.	K70101	Page no. 10
JOB NO.	FILE NO	REV.	DATE	REVISIONS	BY	CHKD.					REPLACES:	REPLACED BY:	Of 10 Pages
													BASED:

Comment	Origin	Type	Signal-/TAG-No.	Path
				1
				2
				3
MAC main drive	Check back signal	1	EH 11001	4
				5
				6
				7
				8
				9
				10
				11
				12
				13
				14
Reset trip MAC	Reset button OS	1	HS 11000	15
				16
				17
				18
				19
				20
				21
				22
				23
				24
				25
				26
				27
				28
				29
				30
				31
Ready to start MAC	from page no. 5/70	1	UH 11003	32
				33
				34
				35
				36
				37
				38
				39
				40
				41
				42
				43
Trip Main air compr.	from page no. 2/57	1	US 11000	44
				45
				46
				47
				48

Function

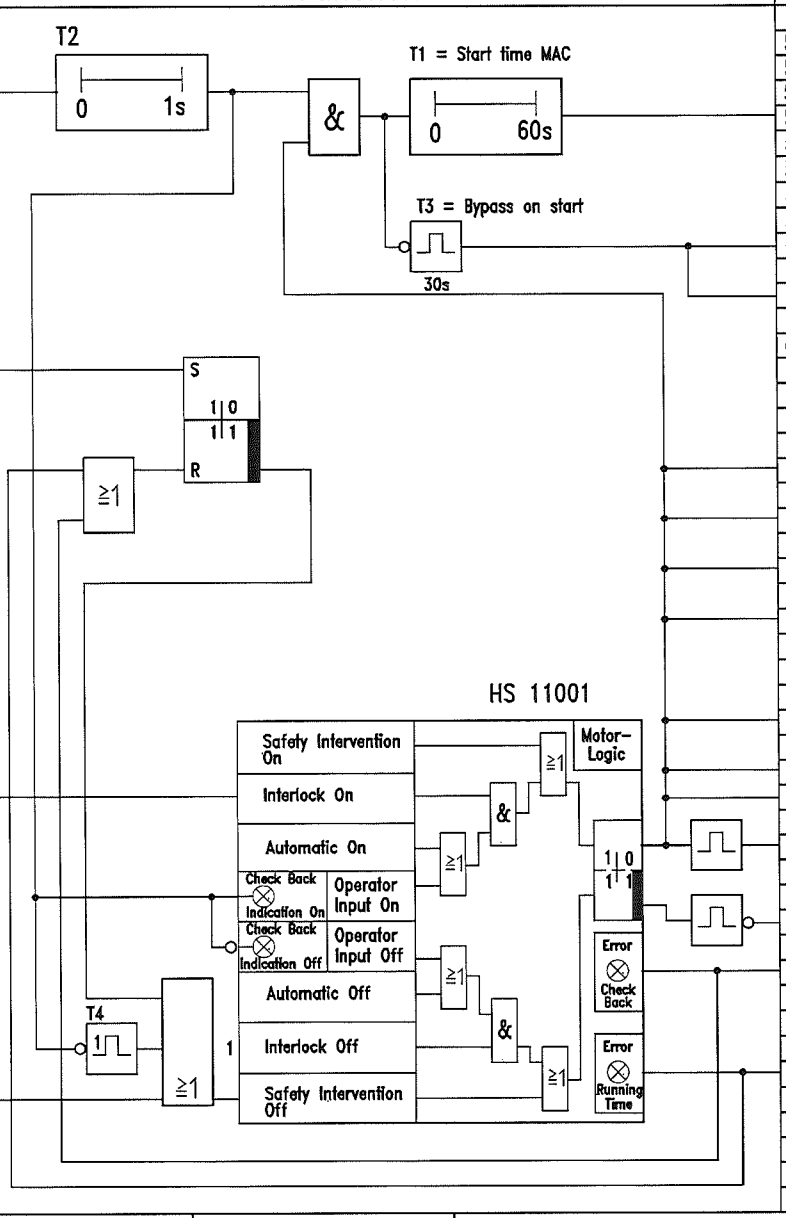

Path	Type	Signal/TAG-No.	Destination	Comment
51				
52				
53				
54				
55	1	EH 11001_del	to page no. 010/34	F15035; US11074
56				
57				
58				
59				
60	1	EH11001_imp	Factor 3	Trip multiplier
61				limit for vibrations
62	0	EH11001_imp	Factor 1	X11740; X11742;
63				X11743; X11745;
64				X11747
65				
66				
67				
68				
69	0	HS 11001	to page 21/28	US 15000
70				
71	0	HS 11001	to page no 011/10	US11706
72				
73	0	HS 11001	to page no. 15/20	Produce Trip DC/AC
74				US 13000
75	0	HS 11001	to page no. 10/5	Open blow off valve
76				US 11074
77				US 11000_1
78				
79	1	HS 11001	Signal to MCC	Motor heating off
80				US 11706 / US11707
81	1	HS 11001	Signal to MCC	MAC main drive on
82	1	HS 1101	to page no. 3/5	
83				
84	1	HH 11001	Motor starter	On signal motor MAC
85				
86				
87	1	HL 11001	Motor starter	Off signal motor MAC
88				
89	1	HS 11001_CB	Alarm OS	"Check back error"
90				MAC
91				
92				
93	1	HS 11001_RT	Alarm OS	"Running time error"
94				MAC
95				
96				
97				
98				

JOB NO.	FILE NO.	REV.	DATE	REVISIONS	BY	CHKD.
		Rev3	08.6.07	"as built"	Frohn	Stippich
		Rev2	02.2.06		Frohn	Eichler

PROJECT NAME: ASU KOSICE

PLANT PART: MAIN AIR COMPRESSOR

AIR LIQUIDE

Air Liquide AGS GmbH
Fütingsweg 34
47805 Krefeld

DRAWING NAME:
MAIN AIR COMPRESSOR (MAC)
MAIN DRIVE HS11001

SIZE: A3

FUNKTION DIAGRAM

DRWG. NO.: K70101_001.dwg

PROJ. NO.: K70101

REPLACES: | REPLACED BY: | BASED:

DATE: 17.06.2005
AUTHOR: Frohn
CHECK: Eichler
STD.:

Path	Comment	Origin	Type	Signal-/TAG-No.
1				
2				
3	Reset Trip MAC	Software reset button	1	HS 11000
4				
5				
6				
7				
8				
9	Oil pressure MAC	Value < Min2	1	PLL 11847_2
10				
11				
12	Start up sequence		1	EH 11001_2
13				
14	Axial displacement	Value > Max2	1	GHH 11742
15	Axial displacement	Value < Min2	1	GLL 11742
16	Vibration gear HSS	Value > Max2	1	XHH 11740
17	Vibration gear HSS	Value > Max2	1	XHH 11743
18	Vibration comp. DS	Value > Max2	1	XHH 11745
19	Vibration comp. SS	Value > Max2	1	XHH 11747
20				
21	Bearing gear LSS DE	Value > Max2	1	THH 11730
22	Bear. gear LSS NDE	Value > Max2	1	THH 11733
23	Thrust bearing I/B	Value > Max2	1	THH 11735
24	Thrust bearing O/B	Value > Max2	1	THH 11737
25	Bearing gear HSS NDE	Value > Max2	1	THH 11740
26	Bearing gear HSS DE	Value > Max2	1	THH 11743
27	Bearing comp. DS	Value > Max2	1	THH 11745
28	Bearing comp. SS	Value > Max2	1	THH 11747
29				
30				
31				
32				
33				
34				
35				
36				
37				
38				
39				
40				
41	Bearing main motor	Value > Max2	1	THH 11701
42	Bearing main motor	Value > Max2	1	THH 11703
43	Motor winding U	Value > Max2	1	THH 11715
44	Motor winding V	Value > Max2	1	THH 11718
45	Motor winding W	Value > Max2	1	THH 11721
46				
47	Trip conditions MAC	from page no. 3/79	1	US 11000_1
48				

Function

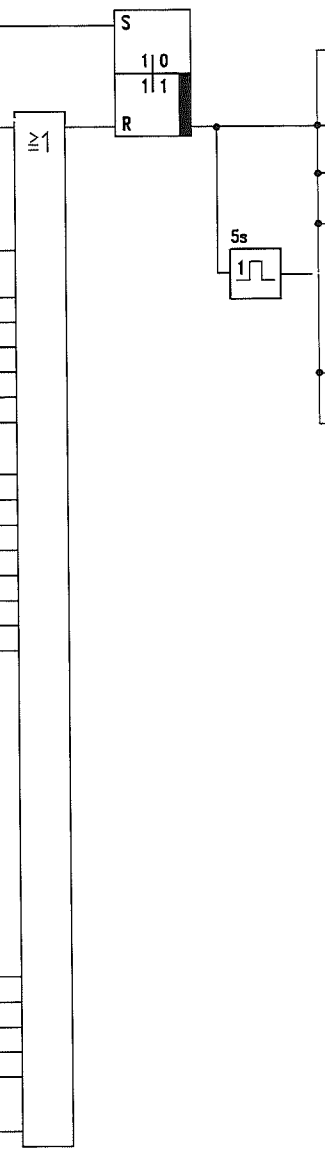

Path	Type	Signal/TAG-No.	Destination	Comment
51				
52				
53				
54	1	UA 11000	Alarm OS	Trip MAC
55				
56				
57	1	US 11000	to page no. 1/44	Trip main air compressor
58				
59	1	US 11000	to page no. 5/23	Ready to start
60				UH 11003
61	1	US 11000	to page no. 10/7	Open blow off valve
62				US 11074
63	1	US 11000_dyn	to page no. 15/24	Produce Trip DCAC
64				US 13000
65	1	US 11000_dyn	to page no. 21/20	Produce trip molsieve
66				US 15000
67	1	US 11000	to page no. 011/12	US11706
68				
69	1	US 11000	to page no. 78/15	FIC 15035
70				
71				
72				
73				
74				
75				
76				
77				
78				
79				
80				
81				
82				
83				
84				
85				
86				
87				
88				
89				
90				
91				
92				
93				
94				
95				
96				
97				
98				

JOB NO.	FILE NO	REV.	DATE	REVISIONS	BY	CHKD.
		Rev3	08.6.07	"as built"	Frohn	Stippich
		Rev2	02.2.06		Frohn	Eichler

PROJECT NAME: ASU KOSICE

PLANT PART: MAIN AIR COMPRESSOR

AIR LIQUIDE

Air Liquide AGS GmbH
Fütingsweg 34
47805 Krefeld

DRAWING NAME: MAIN AIR COMPRESSOR (MAC)
Trip MAC US11000

SIZE: A3

FUNKTION DIAGRAM

DRWG. NO.: K70101_002.dwg

PROJ. NO.: K70101

REPLACES: REPLACED BY: BASED:

DATE: 17.06.2005
AUTHOR: Frohn
CHECK: Eichler
STD.:

Page no.002
Of 230 Pages

Comment	Origin	Type	Signal-/TAG-No.	Path
Start air compressor	from page no. 1/82	1	HS 11001	5
Emergency shut down	Contact ESD-relay	1	HA 92002	22
Discharge MAC	Value > Max2	1	THH 11041	28
Surge protection	from page 12/76	1	UHH 11074	30

Function

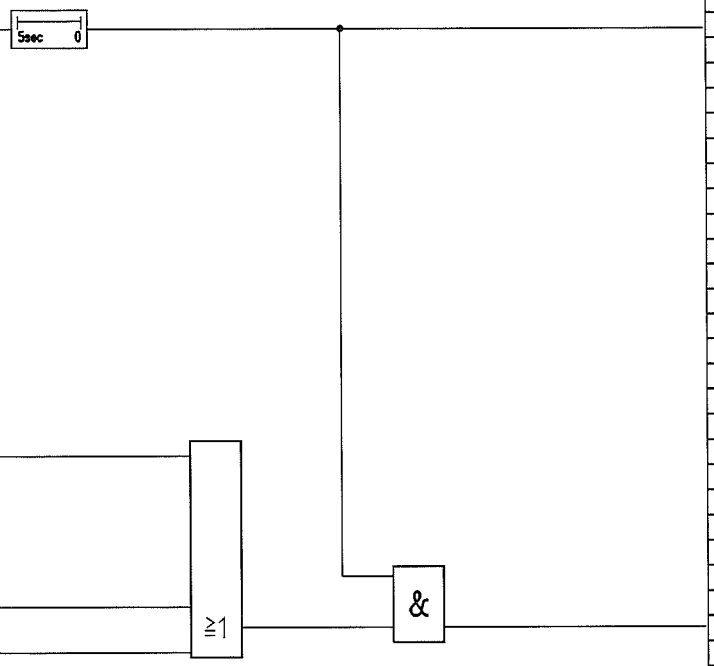

Path	Type	Signal/TAG-No.	Destination	Comment
55	1	EH 11001_dyn		
79	1	US 11000_1	to page no. 2/47	Trip conditions

JOB NO.	FILE NO	REV.	DATE	REVISIONS	BY	CHKD.
		Rev3	08.6.07	"as built"	Frohn	Stippich
		Rev2	02.2.06		Frohn	Eichler

PROJECT NAME: ASU KOSICE

PLANT PART: MAIN AIR COMPRESSOR

AIR LIQUIDE

Air Liquide AGS GmbH
Fütingsweg 34
47805 Krefeld

DRAWING NAME: MAIN AIR COMPRESSOR (MAC)
TRIP CONDITIONS MAC US11000.1

SIZE: A3

FUNKTION DIAGRAM

DRWG. NO.: K70101_003.dwg

PROJ. NO.: K70101

REPLACES: REPLACED BY: BASED:

DATE: 17.06.2005
AUTHOR: Frohn
CHECK: Eichler
STD.:

Comment	Origin	Type	Signal-/TAG-No.	Path
				1
				2
				3
				4
Reset Trip MAC	Software push button	1	HS 11000	5
				6
				7
				8
Trip DC/AC	from page no. 15/57	1	US13000_dyn	9
				10
Trip mol sieve	from page no. 21/90	1	US15000_dyn	11
				12
				13
				14
Trip cold box	from page no.101/94	1	US20000_dyn	15
one shot				16
				17
				18
				19
				20
				21
				22
				23
				24
				25
				26
				27
				28
				29
				30
				31
				32
				33
				34
				35
				36
				37
				38
				39
				40
				41
				42
				43
				44
				45
				46
				47
				48

Function

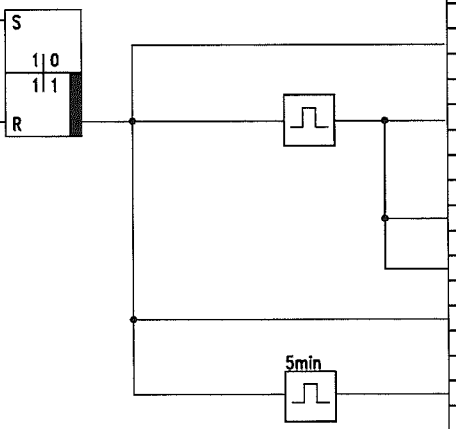

Path	Type	Signal/TAG-No.	Destination	Comment
51				
52				
53				
54				
55				
56	1	US 11000_2	Alarm OS	Partial Trip MAC
57				
58				
59	1	US 11000_2_dyn	Y = 0%, manual	PIC 11041, Y=100%,
60				manual
61				
62				
63	1	US 11000_2_dyn	to page no. 20/26	Produce trip US15000
64				
65	1	US 11000_2_dyn	to page no. 78/17	FIC 15035
66				
67	1	US11000_2	to page no. 10/9	Open blow off valve
68				US 11074
69				
70	1	US11000_2	FIC 15035	Position guide vane
71				FV11010 Y=0%,
72				manual
73				
74				
75				
76				
77				
78				
79				
80				
81				
82				
83				
84				
85				
86				
87				
88				
89				
90				
91				
92				
93				
94				
95				
96				
97				
98				

JOB NO.	FILE NO	REV.	DATE	REVISIONS	BY	CHKD.
		Rev3	08.6.07	"as built"	Frohn	Stippich
		Rev2	02.2.06		Frohn	Eichler

PROJECT NAME: ASU KOSICE

PLANT PART: MAIN AIR COMPRESSOR

AIR LIQUIDE

Air Liquide AGS GmbH
Fütingsweg 34
47805 Krefeld

DRAWING NAME:
MAIN AIR COMPRESSOR (MAC)
PARTIAL TRIP MAC US11000.2

SIZE: A3 — FUNKTION DIAGRAM

DRWG. NO.: K70101_004.dwg

PROJ. NO.: K70101

REPLACES: REPLACED BY:

DATE: 17.06.2005
AUTHOR: Frohn
CHECK: Eichler
STD.:

BASED:

Path	Comment	Origin	Type	Signal-/TAG-No.
1				
2				
3	Trip DC/AC	from page no. 15/77	1	US 13000
4				
5	Position UK 15011	End position switch	1	GL 15011
6	Closed			
7	Position UK 15021	End position switch	1	GL 15021
8	Closed			
9	UK 15018 closed	from page no. 59/83	0	US 15018
10				
11	UK 15208 closed	from page no. 65/83	0	US 15028
12				
13	Guide vane MAC	End position switch	1	GL 11010
14	Closed			
15	Blow off valve MAC	End position switch	1	GH 11074
16	Opened			
17	Oil pressure MAC	Value < Min	1	PL 11854
18				
19	Oil circuit MAC	Value < Min	1	TL 11854
20				
21	Level oil Tank	Level switch > Min	1	LL 11812
22				
23	Trip MAC	from page no. 2/59	1	US 11000
24				
25	MAC main drive	Check back signal	1	EH 11001
26				
27	Enabeling main motor	from page no. 6/73	1	US11003_3
28	disabled			
29	Collective alarm	Contact from MCC	0	EH 11004
30				
31	Cooling water	Value < Min	1	FL 80001
32				
33	Air to MHE closed	End position switch	1	GL 20026
34				
35	Press. air to MHE	Y < 1%	1	HIC 20027
36				
37	Condensate Trap ok	Contact	1	LH 11080
38				
39	Condensate trap ok	Contact	1	LH 11084
40				
41	Seal chamber press.	Value < Min	1	PL 11754
42				
43	PK 16007 closed	Output Y < 1%	1	PIC 16007
44				
45	Aux. oilpump exp.1	Check back signal	1	EH 24163
46	Aux. oilpump exp.2	Check back signal	1	EH 24263
47				
48				

Function

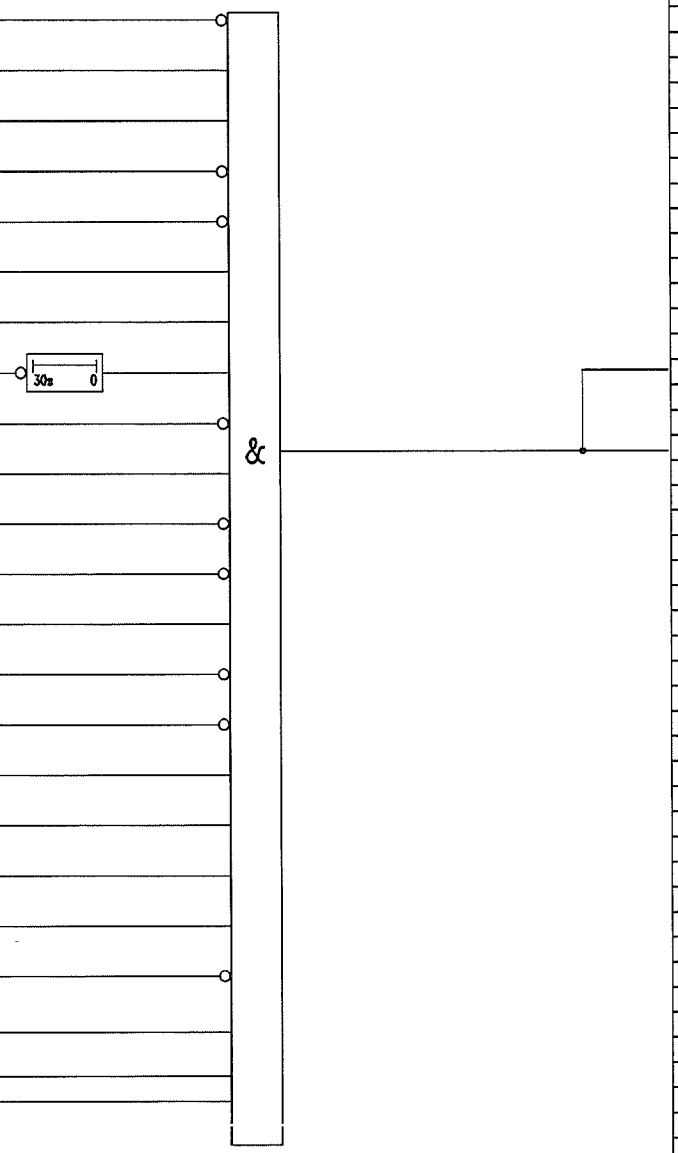

Path	Type	Signal/TAG-No.	Destination	Comment
51				
52				
53				
54				
55				
56				
57				
58				
59				
60				
61				
62				
63				
64				
65				
66				
67	1	UH 11003	Monitoring OS	"Ready to start MAC"
68				
69				
70	1	UH 11003	to page no. 1/32	Ready to start MAC
71				
72				
73				
74				
75				
76				
77				
78				
79				
80				
81				
82				
83				
84				
85				
86				
87				
88				
89				
90				
91				
92				
93				
94				
95				
96				
97				
98				

JOB NO.	FILE NO	REV.	DATE	REVISIONS	BY	CHKD.
		Rev3	08.6.07	"as built"	Frohn	Stippich
		Rev2	02.2.06		Frohn	Eichler

PROJECT NAME: ASU KOSICE

PLANT PART: MAIN AIR COMPRESSOR

AIR LIQUIDE

Air Liquide AGS GmbH
Fütingsweg 34
47805 Krefeld

DRAWING NAME: MAIN AIR COMPRESSOR (MAC)
READY TO START UH11003

SIZE	A3	FUNKTION DIAGRAM	DATE 17.06.2005
			AUTHOR Frohn
			CHECK Eichler
DRWG. NO.	K70101_005.dwg		STD.
PROJ. NO.	K70101		Page no. 005
			Of 230 Pages
REPLACES:	REPLACED BY:		BASED:

Rang.	Comment	Origin	Type	Signal-/TAG-No.	Path
	MAC motor drive	Check back signal	1	EH 11001	7

Function

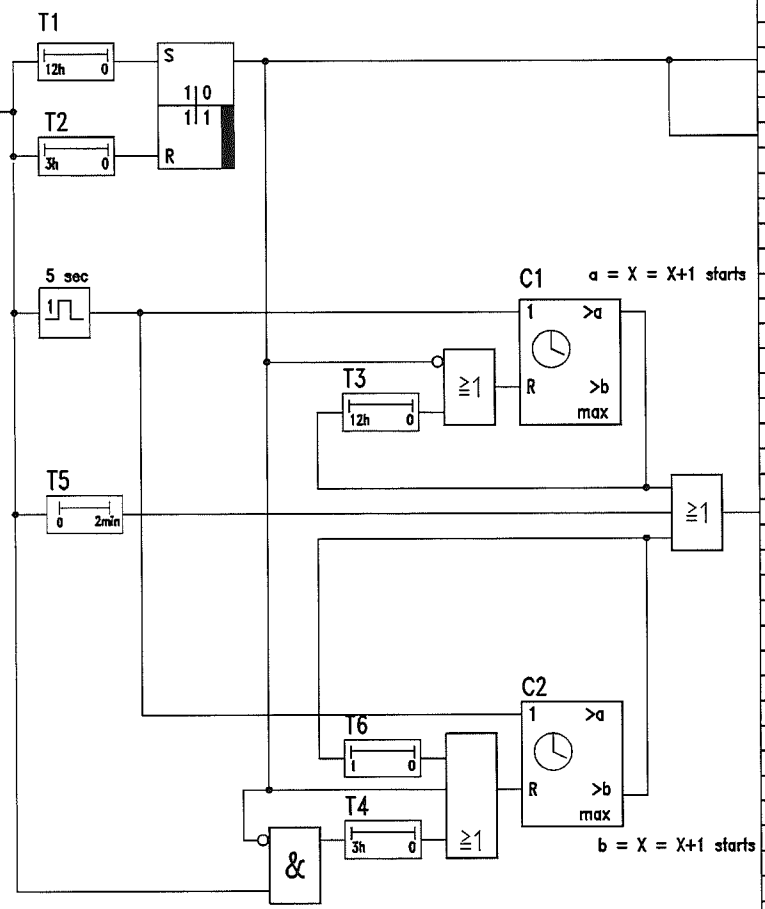

T1 = Time for motor is cold
T2 = Time for motor is warm
T3 = Reset time after 3 failed cold starts
T4 = Reset time adter 1 sucsessful warm start
T5 = Minimum disable time
C1 = Counter for cold starts
C2 = Counter for warm starts

Path	Type	Signal/TAG-No.	Destination	Comment	Rang.
55	1			Main motor cold	
58	0			Main motor warm	
73	1	US11003_3	to page no. 5/27	Enabeling switch control	
74				main motor	

JOB NO.	FILE NO.	REV.	DATE	REVISIONS	BY	CHKD.
		Rev3	08.6.07	"as built"	Frohn	Stippich
		Rev2	02.2.06		Frohn	Eichler

PROJECT NAME: ASU KOSICE

PLANT PART: MAIN AIR COMPRESSOR

AIR LIQUIDE

Air Liquide AGS GmbH
Fütingsweg 34
47805 Krefeld

DRAWING NAME: MAIN AIR COMPRESSOR (MAC)
ENABELING MAIN MOTOR US11003_1

SIZE: A3 — FUNKTION DIAGRAM

DRWG. NO.: K70101_006.dwg

PROJ. NO.: K70101

REPLACES: REPLACED BY: BASED:

DATE: 17.06.2005
AUTHOR: Frohn
CHECK: Eichler
STD.:

Rang.	Comment	Origin	Type	Signal-/TAG-No.	Path
	MAC main drive on	Check back signal	1	EH 11001	4
	Oil heater MAC on	Check back signal	1	EH 11810	10
	Level oil tank MAC	Level switch < Min	0	LL 11815	18
	Temp. oil tank	Limit switch < Max	1	THH 11810	42
	Temp. oil tank	Control contact	1	TC 11810	43

Function

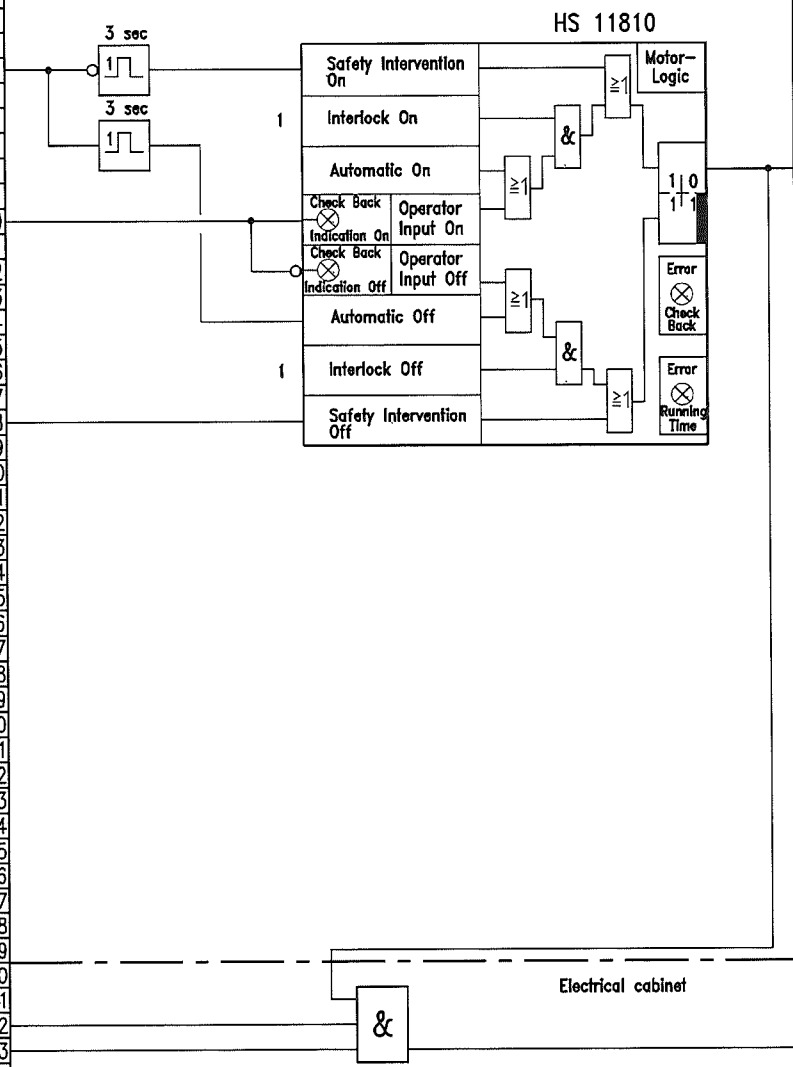

Path	Type	Signal/TAG-No.	Destination	Comment	Rang.
58	1	US 11810	Signal to MCC	Oil heater MAC on	
93	1	W 11810	ON	Oil heater MAC	

JOB NO.	FILE NO	REV.	DATE	REVISIONS	BY	CHKD.
		Rev3	08.6.07	"as built"	Frohn	Stippich
		Rev2	02.2.06		Frohn	Eichler

PROJECT NAME: ASU KOSICE

PLANT PART: MAIN AIR COMPRESSOR

AIR LIQUIDE

Air Liquide AGS GmbH
Fütingsweg 34
47805 Krefeld

DRAWING NAME: OIL HEATER HS11810

SIZE: A3

FUNKTION DIAGRAM

DRWG. NO.: K70101_007.dwg

PROJ. NO.: K70101

REPLACES: REPLACED BY: BASED:

DATE: 17.06.2005
AUTHOR: Frohn
CHECK: Eichler
STD.:

Rang.	Comment	Origin	Type	Signal-/TAG-No.	Path
					1
					2
	Oil pressure MAC	Value < Min1	1	PL 11747	3
					4
	Oil pressure MAC	Value < Min1	1	PL 11854	5
					6
					7
					8
					9
	MAC main drive on	Check back signal	1	EH 11001	10
					11
					12
					13
	Seal camber press.	Valuve < Min	1	PL 11754	14
					15
	Lube oil reservoir	Contact < Min	1	LL11812	16
					17
	Lube oil reservoir	Value < Min2	1	TLL 11814	18
					19
					20
					21
					22
					23
	Aux. oil pump on	Check back signal	1	EH 11820	24
					25
					26
					27
					28
					29
					30
					31
					32
					33
					34
					35
					36
					37
					38
					39
	Reset Trip MAC	Software reset button	1	HS 11000	40
					41
					42
					43
					44
					45
					46
					47

Function

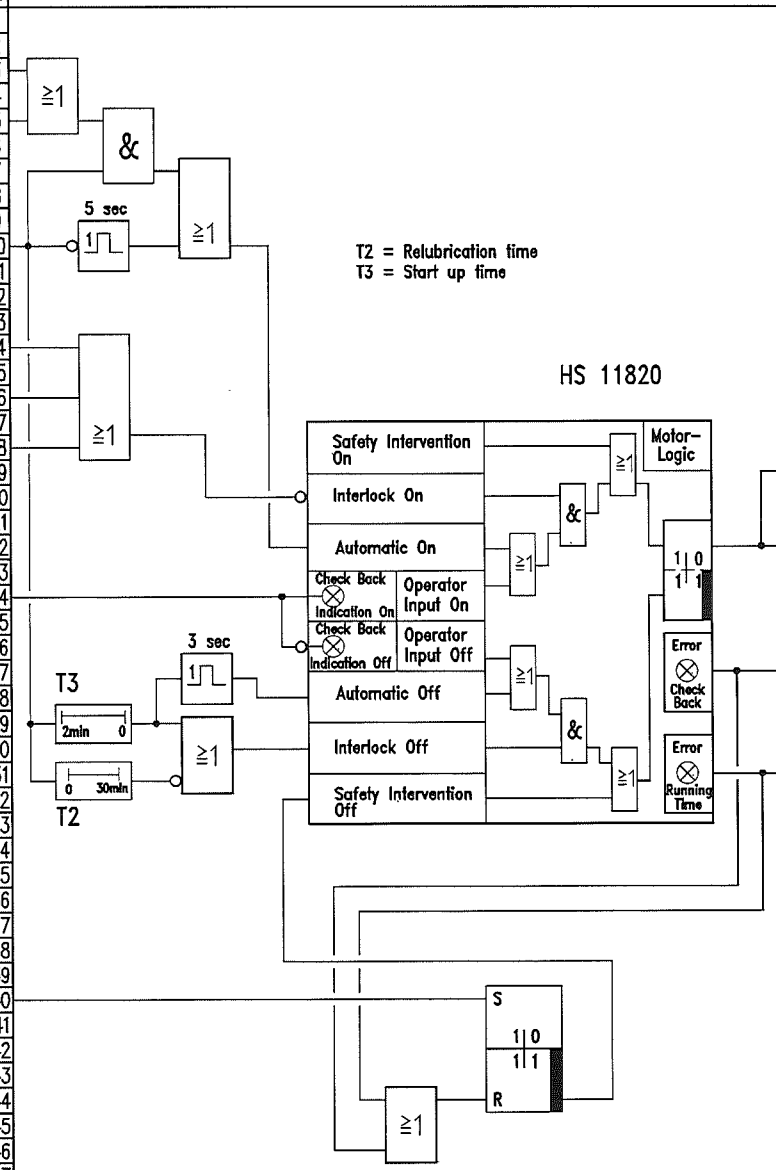

Path	Type	Signal/TAG-No.	Destination	Comment	Rang.
51					
52					
53					
54					
55					
56					
57					
58					
59					
60					
61					
62					
63					
64					
65					
66					
67					
68					
69	1	HS 11803	to page no. 9/10	Oil demister MAC on	
70					
71					
72	1	HS 11820	Signal to MCC	Aux. oil pump MAC on	
73					
74					
75					
76					
77	1	HS 11820_CB	Alarm OS	"Check back error"	
78				Aux. oil pump MAC	
79					
80					
81	1	HS 11820_RT	Alarm OS	"Running time error"	
82				Aux. oil pump MAC	
83					
84					
85					
86					
87					
88					
89					
90					
91					
92					
93					
94					
95					
96					
97					
98					

JOB NO.	FILE NO	REV.	DATE	REVISIONS	BY	CHKD.
		Rev3	08.6.07	"as built"	Frohn	Stippich
		Rev2	02.2.06		Frohn	Eichler

PROJECT NAME: ASU KOSICE

PLANT PART: MAIN AIR COMPRESSOR

AIR LIQUIDE

Air Liquide AGS GmbH
Fütingsweg 34
47805 Krefeld

DRAWING NAME:
MAIN AIR COMPRESSOR (MAC)
AUXILLIARY OIL PUMP HS11820

SIZE: A3

FUNKTION DIAGRAM

DRWG. NO.: K70101_008.dwg

PROJ. NO.: K70101

REPLACES: REPLACED BY: BASED:

DATE: 17.06.2005
AUTHOR: Frohn
CHECK: Eichler
STD.:

Rang.	Comment	Origin	Type	Signal-/TAG-No.	Path
	Oil demister on	Check back signal	1	EH 11803	18
	Aux. oil pump on	Check back signal	1	EH 11820	24
	Reset Trip MAC	Software reset button	1	HS 11000	33

Function

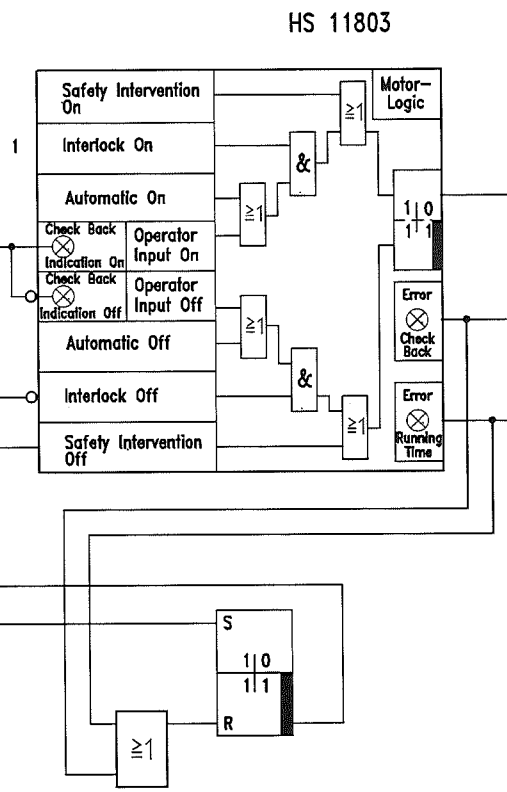

Path	Type	Signal/TAG-No.	Destination	Comment	Rang.
66	1	HS 11803	Signal to MCC	Oil demister MAC on	
71	1	HS 11803_CB	Alarm OS	"Check back error"	
				Oil demister MAC	
75	1	HS 11803_RT	Alarm OS	"Running time error"	
				Oil demister MAC	

JOB NO.	FILE NO	REV.	DATE	REVISIONS	BY	CHKD.
		Rev3	08.6.07	"as built"	Frohn	Stippich
		Rev2	02.2.06		Frohn	Eichler

PROJECT NAME: ASU KOSICE

PLANT PART: MAIN AIR COMPRESSOR

AIR LIQUIDE

Air Liquide AGS GmbH
Fütingsweg 34
47805 Krefeld

DRAWING NAME: MAIN AIR COMPRESSOR (MAC)
OIL DEMISTER HS11803

SIZE: A3 | FUNKTION DIAGRAM

DRWG. NO.: K70101_009.dwg

PROJ. NO.: K70101

REPLACES: | REPLACED BY: | BASED:

DATE: 17.06.2005
AUTHOR: Frohn
CHECK: Eichler
STD.:

Rang.	Comment	Origin	Type	Signal-/TAG-No.	Path
					1
					2
					3
					4
	MAC main drive off	from page no. 1/75	0	HS 11001	5
					6
	Trip MAC	from page no. 2/61	1	US 11000	7
					8
	Partial Trip MAC	from page no. 4/67	1	US 11000_2	9
					10
	Surge protection	from page no. 12/55	1	USHH 11074	11
					12
	Surge protection	from page no. 12/78	1	USHHH 11074	13
					14
					15
					16
					17
					18
					19
					20
					21
					22
					23
					24
					25
					26
					27
					28
					29
					30
					31
					32
					33
	Main drive on	from page 001/55	1	EH 11001_del	34
	Blow off valve open	End position switch	1	GH 11074	35
	Gas press. outlet	Y > 99%	1	P 11041_Y1	36
					37
					38
					39
					40
					41
					42
					43
					44
					45
					46
					47
					48

Function

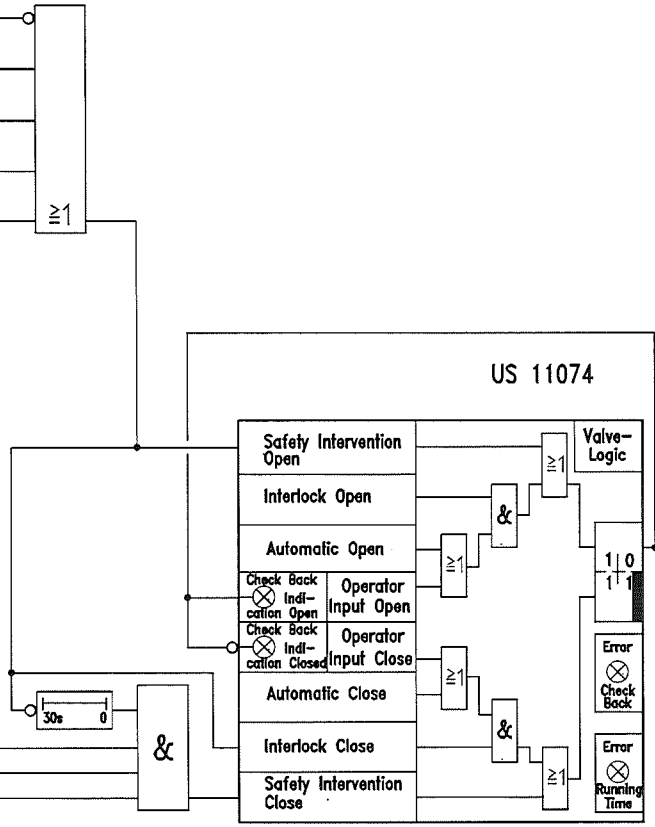

Path	Type	Signal/TAG-No.	Destination	Comment	Rang.
51					
52					
53					
54					
55					
56					
57					
58					
59					
60					
61					
62					
63					
64					
65					
66					
67					
68					
69					
70					
71					
72					
73					
74					
75					
76	0	US 11074	Solenoid valve off	Open BOV 11074	
77					
78					
79					
80					
81					
82					
83					
84					
85					
86					
87					
88					
89					
90					
91					
92					
93					
94					
95					
96					
97					
98					

JOB NO.	FILE NO.	REV.	DATE	REVISIONS	BY	CHKD.
		Rev3	08.6.07	"as built"	Frohn	Stippich
		Rev2	02.2.06		Frohn	Eichler

PROJECT NAME: ASU KOSICE

PLANT PART: MAIN AIR COMPRESSOR

AIR LIQUIDE

Air Liquide AGS GmbH
Fütingsweg 34
47805 Krefeld

DRAWING NAME: MAIN AIR COMPRESSOR (MAC) SOLENOID VALVE BLOW OFF VALVE

SIZE: A3

FUNKTION DIAGRAM

DRWG. NO.: K70101_010.dwg

PROJ. NO.: K70101

REPLACES: REPLACED BY: BASED:

DATE: 17.06.2005
AUTHOR: Frohn
CHECK: Eichler
STD.:

Comment	Origin	Type	Signal-/TAG-No.	Path
Main drive	from page no. 1/71	1	HS 11001	10
Trip Mac	from page no. 2/67	1	US 11000	12

Function

Path	Type	Signal/TAG-No.	Destination	Comment
61	1	US11706_0	Signal to MCC	Motor heating on

Rev3	08.6.07	"as built"	Frohn	Stippich
Rev2	02.2.06		Frohn	Eichler
JOB NO.	FILE NO	REV.	DATE	REVISIONS	BY	CHKD.

PROJECT NAME: ASU KOSICE

PLANT PART: MAIN AIR COMPRESSOR

AIR LIQUIDE

Air Liquide AGS GmbH
Fütingsweg 34
47805 Krefeld

DRAWING NAME:
MAIN AIR COMPRESSOR (MAC)
SPARE MOTOR HEATING US 11706

SIZE A3 — FUNKTION DIAGRAM

DRWG. NO. K70101_011.dwg

PROJ. NO. K70101

REPLACES: REPLACED BY: BASED:

DATE 17.06.2005
AUTHOR Frohn
CHECK Eichler
STD.

Page no. 011
Of 230 Pages

Rang.	Comment	Origin	Type	Signal-/TAG-No.	Path
	Discharge pressure MAC	P-Transmitter	1	PT 11041	8
	Reset surge protect.	Software push button	1	US11074_RES	24
	Blow off valve open	End position switch	1	GH 11074	40

Function

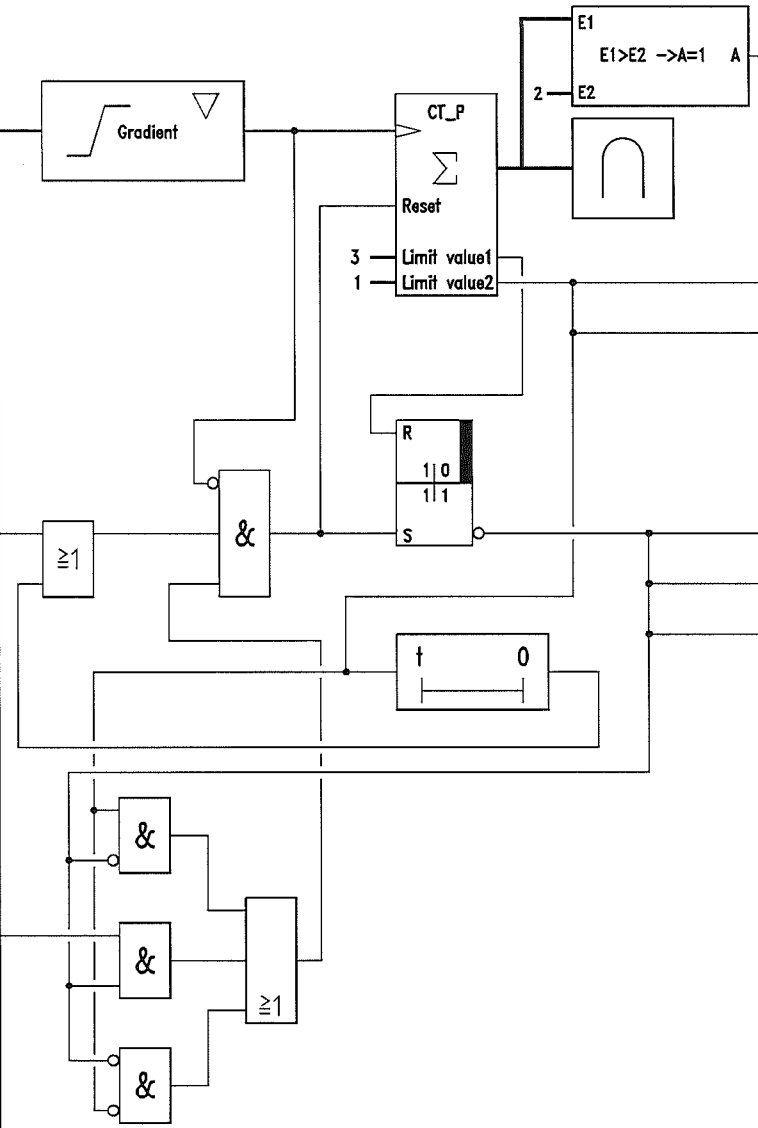

Path	Type	Signal/TAG-No.	Destination	Comment	Rang.
55	1	USHH 11074	to page no. 010/11	Surge protection	
64	1	UAH 11074	Alarm OS	"1 surge push"	
66	1	UH 11074	to page no. 013/25		
74	1	UAHH 11074	Alarm OS	"Surge protection"	
76	1	UHH 11074	to page no. 003/30	Surge protection	
78	1	USHHH 11074	to page no. 10/13	Surge protection	

JOB NO.	FILE NO.	REV.	DATE	REVISIONS	BY	CHKD.
		Rev3	08.6.07	"as built"	Frohn	Stippich
		Rev2	02.2.06		Frohn	Eichler

PROJECT NAME: ASU KOSICE

PLANT PART: MAIN AIR COMPRESSOR

AIR LIQUIDE

Air Liquide AGS GmbH
Fütingsweg 34
47805 Krefeld

DRAWING NAME: MAIN AIR COMPRESSOR (MAC) ANTI SURGE PROTECTION U11031

SIZE: A3

FUNKTION DIAGRAM

DRWG. NO.: K70101_012.dwg

PROJ. NO.: K70101

REPLACES: REPLACED BY: BASED:

DATE: 17.06.2005
AUTHOR: Frohn
CHECK: Eichler
STD.:

Comment	Origin	Type	Signal-/TAG-No.	Path
Output signal FIC11074	0...100%	E	FYI 11074	14
+ 10%	Constant	E		21
Surge protection	from page no. 12/66	1	UH 11074	25
Output signal	0...100%	E	P11041_1_0	31

Function

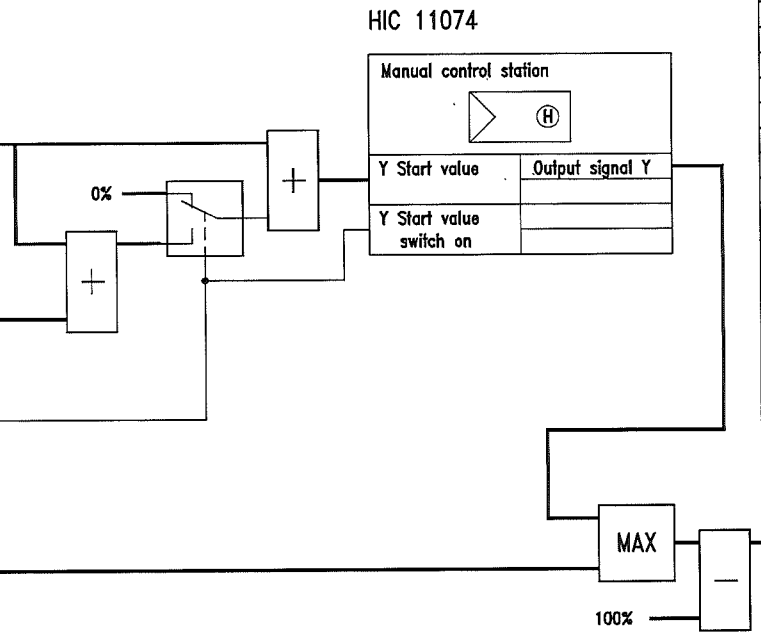

Path	Type	Signal/TAG-No.	Destination	Comment
80	E	HIC11074	to AC-controller FIC 11074	Manual output signal blow off valve

JOB NO.	FILE NO	REV.	DATE	REVISIONS	BY	CHKD.
		Rev3	08.6.07	"as built"	Frohn	Stippich
		Rev2	02.2.06		Frohn	Eichler

PROJECT NAME: ASU KOSICE

PLANT PART: MAIN AIR COMPRESSOR

AIR LIQUIDE

Air Liquide AGS GmbH
Fütingsweg 34
47805 Krefeld

DRAWING NAME: MAIN AIR COMPRESSOR (MAC)
MANUAL OUTPUT SIGNAL BLOW OFF
HIC 11074

SIZE: A3

FUNKTION DIAGRAM

DRWG. NO.: K70101_013.dwg

PROJ. NO.: K70101

REPLACES: REPLACED BY: BASED:

DATE: 17.06.2005
AUTHOR: Frohn
CHECK: Eichler
STD.:

Page no. 013
OF 230 Pages

Comment	Origin	Type	Signal-/TAG-No.	Path
Chiller on	Check back signal	1	EH 12001	18
Reset trip chiller	Software reset button	1	HS 12001_Res	33
Trip DC / AC	from page no. 15/83	1	US 13000	41
Trip chill tower	from page no. 18/76	1	US 1400_dyn	42
Trip engine house	ESD-relay	1	HA 92002	43

Function

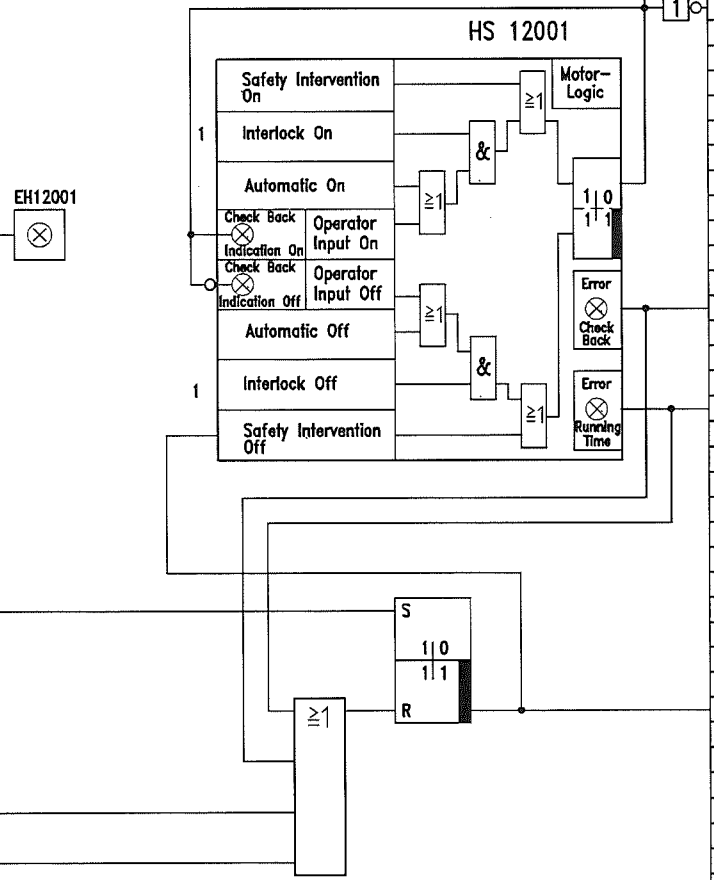

Path	Type	Signal/TAG-No.	Destination	Comment
56	1	HSH 12001	Signal on	Chiller on
59	1	HSL 12001	Signal off	Chiller off
71	1	HS 12001_CB	Alarm OS	"Check back error"
75	1	HS 12001_RT	Alarm OS	"Running time error"
87	1	UA 12001	Alarm OS	"Trip chiller"

JOB NO.	FILE NO.	REV.	DATE	REVISIONS	BY	CHKD.
		Rev3	08.6.07	"as built"	Frohn	Stippich
		Rev2	02.2.06		Frohn	Eichler

PROJECT NAME: ASU KOSICE

PLANT PART: CHILLER

AIR LIQUIDE

Air Liquide AGS GmbH
Fütingsweg 34
47805 Krefeld

DRAWING NAME: CHILLER KA12001 HS/EOH/UA 12001

SIZE: A3

FUNKTION DIAGRAM

DRWG. NO.: K70101_013.dwg

PROJ. NO.: K70101

REPLACES: REPLACED BY: BASED:

DATE: 17.06.2005
AUTHOR: Frohn
CHECK: Eichler
STD.:

Rang.	Comment	Origin	Type	Signal-/TAG-No.	Path
					1
					2
					3
					4
					5
	Reset trip DCAC	Software button OS	1	HS 13000	6
					7
					8
					9
					10
					11
					12
					13
					14
	Level cooling water	Value > Max2	1	LHH 13003	15
					16
	Level cooling water	Value > Max2	1	LHH 13013	17
					18
					19
	Off signal Motor MAC	from page no. 1/73	0	HS 11001	20
					21
	DP DC/AC	Value > Max2	1	PDHH 13004	22
					23
	Trip MAC	from page no. 2/63	1	US 11000_dyn	24
					25
					26
					27
					28
					29
					30
					31
					32
					33
					34
					35
					36
					37
					38
					39
					40
					41
					42
					43
					44
					45
					46
					47
					48

Function

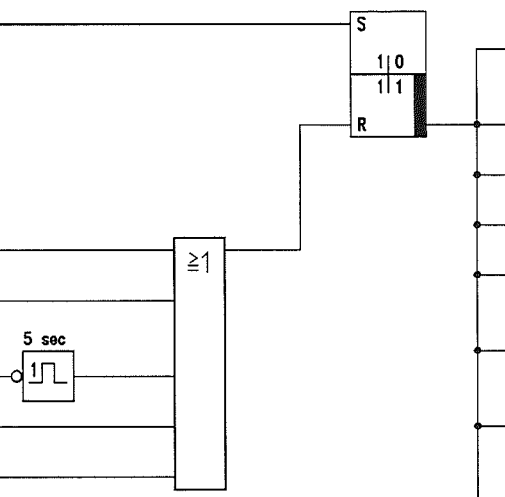

Path	Type	Signal/TAG-No.	Destination	Comment	Rang.
51					
52					
53					
54					
55	1	US 13000_dyn	to page no. 84/9	Partial Trip BAC	
56					
57	1	US 13000_dyn	to page no. 4/9	Partial Trip MAC	
58					
59					
60	1	UA 13000	Alarm OS	"Trip DCAC"	
61					
62	1	US 13000	to page no. 16/39	Cooling water pump	
63				P13100 DCAC off	
64	1	US 13000	to page no. 17/39	Cooling water pump	
65				P13200 DCAC off	
66	1	US 13000	FIC 13006	Chilled water to DCAC	
67			Manual, Y = 0%		
68					
69	1	US 13000	FIC 13007	Cooling water to DCAC	
70			Manual, Y = 0%		
71					
72	1	US 13000	LIC 13003	Level cooling water DCAC	
73			Manual, Y = 0%		
74					
75					
76					
77	0	US 13000	to page no. 5/3	Ready to start MAC	
78				UH 11003	
79					
80	1	US 13000	to page no. 18/16	Produce trip chill	
81				tower US 14000	
82					
83	1	US 13000	to page no. 14/41	Produce trip chiller	
84					
85					
86					
87					
88					
89					
90					
91					
92					
93					
94					
95					
96					
97					
98					

JOB NO.	FILE NO.	REV.	DATE	REVISIONS	BY	CHKD.
		Rev3	08.6.07	"as built"	Frohn	Stippich
		Rev2	02.2.06		Frohn	Eichler

PROJECT NAME: ASU KOSICE

PLANT PART: DC / AC

AIR LIQUIDE

Air Liquide AGS GmbH
Fütingsweg 34
47805 Krefeld

DRAWING NAME: DC/AC Trip US13000

SIZE: A3

FUNKTION DIAGRAM

DRWG. NO.: K70101_015.dwg

PROJ. NO.: K70101

REPLACES: REPLACED BY: BASED:

DATE: 17.06.2005
AUTHOR: Frohn
CHECK: Eichler
STD.:

Page no. 015
Of 230 Pages

Rang.	Comment	Origin	Type	Signal-/TAG-No.	Path
					1
					2
	Motor logic HS13100	Automatic	1		3
	at "automatic"				4
	CW pump P13200 on	Check back signal	1	EH 13200	5
					6
					7
					8
					9
					10
					11
	Reset trip DCAC	Software button OS	1	HS 13100_RES	12
					13
					14
					15
					16
					17
					18
					19
					20
					21
					22
					23
					24
					25
	Discharge MAC	Value < Min	1	PL 11041	26
					27
					28
					29
	CW pump P13100 on	Check back signal	1	EH 13100	30
					31
					32
					33
					34
					35
					36
					37
					38
	Trip DCAC	from page no. 15/62	1	US 13000	39
					40
					41
					42
					43
					44
					45
					46
					47
					48

Function

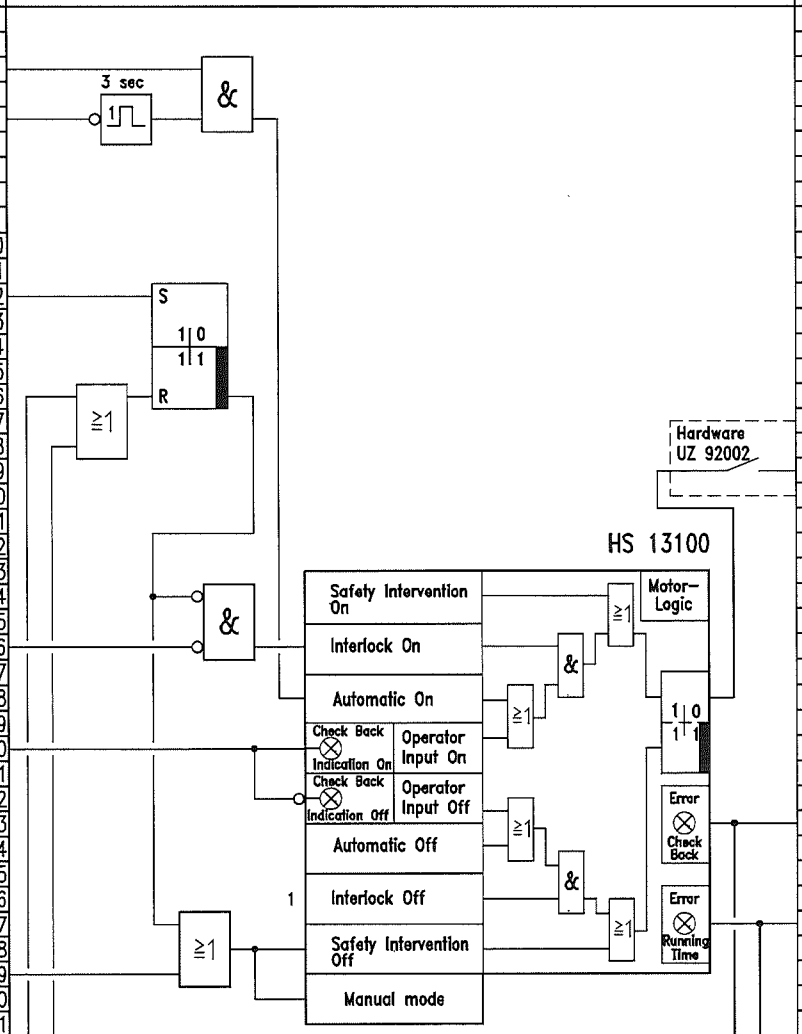

Path	Type	Signal/TAG-No.	Destination	Comment	Rang.
51					
52					
53					
54					
55					
56					
57					
58					
59					
60					
61					
62					
63					
64					
65					
66					
67					
68					
69	1	HS 13100	Signal to MCC	CW pump P13100	
70				DCAC on	
71					
72					
73					
74					
75					
76					
77					
78					
79					
80					
81					
82					
83	1	HS 13100_CB	Alarm OS	"Check back error"	
84					
85					
86					
87	1	HS 13100_RT	Alarm OS	"Running time error"	
88					
89					
90					
91					
92					
93					
94					
95					
96					
97					
98					

JOB NO.	FILE NO	REV.	DATE	REVISIONS	BY	CHKD.
		Rev3	08.6.07	"as built"	Frohn	Stippich
		Rev2	02.2.06		Frohn	Eichler

PROJECT NAME: ASU KOSICE

PLANT PART: DC /AC

AIR LIQUIDE

Air Liquide AGS GmbH
Fütingsweg 34
47805 Krefeld

DRAWING NAME: DC / AC

COOLING WATER PUMP P13100
HS 13100

SIZE: A3

FUNKTION DIAGRAM

DRWG. NO.: K70101_016.dwg

PROJ. NO.: K70101

REPLACES: REPLACED BY: BASED:

DATE: 17.06.2005
AUTHOR: Frohn
CHECK: Eichler
STD.:

Rang.	Comment	Origin	Type	Signal-/TAG-No.	Path
					1
					2
	Motor logic HS13200	Automatic	1		3
	at "automatic"				4
	CW pump P13100 on	Check back signal	1	EH 13100	5
					6
					7
					8
					9
					10
					11
	Reset trip DCAC	Software button OS	1	HS 13200_RES	12
					13
					14
					15
					16
					17
					18
					19
					20
					21
					22
					23
					24
					25
	Discharge MAC	Value < Min	1	PL 11041	26
					27
					28
					29
	CW pump P13200 on	Check back signal	1	EH 13200	30
					31
					32
					33
					34
					35
					36
					37
					38
	Trip DCAC	from page no. 15/64	1	US 13000	39
					40
					41
					42
					43
					44
					45
					46
					47
					48

Function

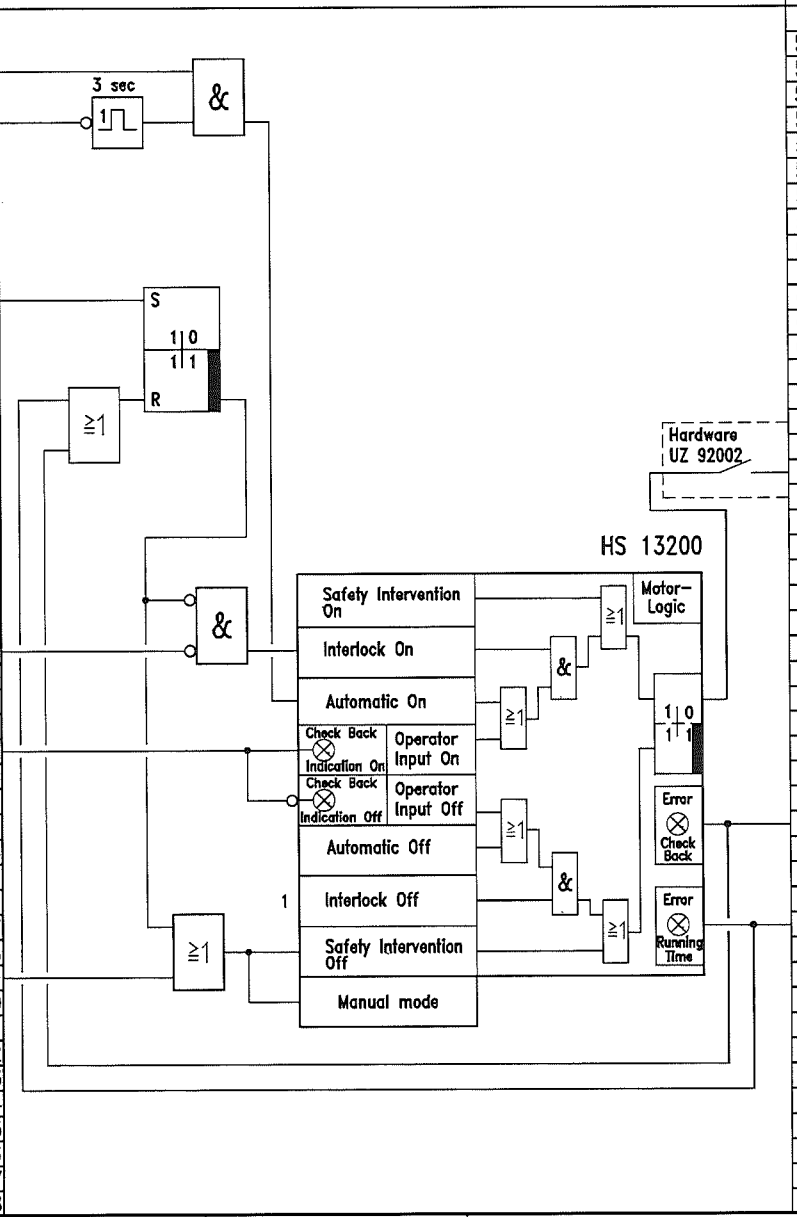

Path	Type	Signal/TAG-No.	Destination	Comment	Rang.
51					
52					
53					
54					
55					
56					
57					
58					
59					
60					
61					
62					
63					
64					
65					
66					
67					
68					
69	1	HS 13200	Signal to MCC	CW pump P13200	
70				DCAC on	
71					
72					
73					
74					
75					
76					
77					
78					
79					
80					
81					
82					
83	1	HS 13200_CB	Alarm OS	"Check back error"	
84					
85					
86					
87	1	HS 13200_RT	Alarm OS	"Running time error"	
88					
89					
90					
91					
92					
93					
94					
95					
96					
97					
98					

JOB NO.	FILE NO	REV.	DATE	REVISIONS	BY	CHKD.
		Rev3	08.6.07	"as built"	Frohn	Stippich
		Rev2	02.2.06		Frohn	Eichler

PROJECT NAME: ASU KOSICE

PLANT PART: DC / AC

AIR LIQUIDE

Air Liquide AGS GmbH
Fütingsweg 34
47805 Krefeld

DRAWING NAME: DC/AC
COOLING WATER PUMP P13200
HS 13200

SIZE: A3

FUNKTION DIAGRAM

DRWG. NO.: K70101_017.dwg

PROJ. NO.: K70101

REPLACES: REPLACED BY: BASED:

DATE: 17.06.2005
AUTHOR: Frohn
CHECK: Eichler
STD.:

Rang.	Comment	Origin	Type	Signal-/TAG-No.	Path
					1
					2
					3
					4
					5
					6
					7
					8
					9
	Reset trip chill tower	Software button OS	1	HS 14000	10
					11
					12
					13
	Level chill tower	Value < Min2	1	LLL 14003	14
					15
	Trip DCAC	from page no. 15/80	1	US 13000	16
					17
	Alarm fail P14100	from page no. 19/66	1	HS 14100_CB_RT	18
					19
	Alarm fail P14200	from page no. 20/66	1	HS 14200_CB_RT	20
					21
					22
					23
					24
					25
					26
					27
					28
					29
					30
					31
					32
					33
					34
					35
					36
					37
					38
					39
					40
					41
					42
					43
					44
					45
					46
					47
					48

Function

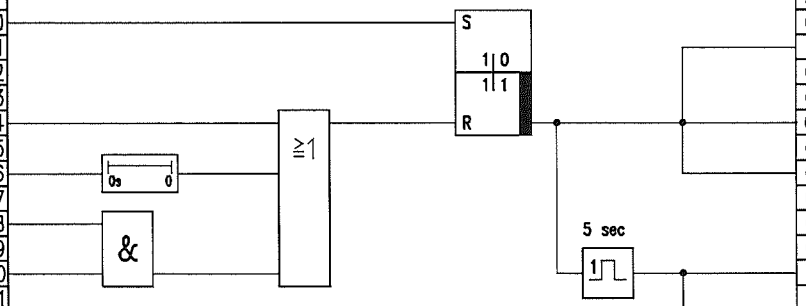

Path	Type	Signal/TAG-No.	Destination	Comment	Rang.
51					
52					
53					
54					
55					
56					
57					
58					
59					
60					
61	1	UA 14000	Alarm OS	"Trip CW chill tower"	
62					
63					
64	1	US 14000	to page no. 19/39	CW pump P14100 off	
65				HS 14100	
66	1	US 14000	to page no. 20/39	CW pump P14200 off	
67				HS 14200	
68					
69					
70	1	US 14000_dyn	LIC 14003	Level chill tower	
71			Manual, Y = 0%		
72	1	US 14000_dyn	TIC 12003	Chilled water to DCAC	
73			Manual, Y = 0%		
74	1	US 14000_dyn	FIC 13006		
75			Manual, Y = 0%	Chilled water to DCAC	
76	1	US 14000_dyn	to page no. 14/42	Chiller off	
77					
78					
79					
80					
81					
82					
83					
84					
85					
86					
87					
88					
89					
90					
91					
92					
93					
94					
95					
96					
97					
98					

JOB NO.	FILE NO.	REV.	DATE	REVISIONS	BY	CHKD.
		Rev3	08.6.07	"as built"	Frohn	Stippich
		Rev2	02.2.06		Frohn	Eichler

PROJECT NAME: ASU KOSICE

PLANT PART: CHILL TOWER

AIR LIQUIDE

Air Liquide AGS GmbH
Fütingsweg 34
47805 Krefeld

DRAWING NAME: CHILL TOWER TRIP US14000

SIZE: A3

FUNKTION DIAGRAM

DRWG. NO.: K70101_018.dwg

PROJ. NO.: K70101

REPLACES: | REPLACED BY: | BASED:

DATE: 17.06.2005
AUTHOR: Frohn
CHECK: Eichler
STD.:

Rang.	Comment	Origin	Type	Signal-/TAG-No.	Path
					1
					2
	Motor logic HS14200	Automatic	1		3
	at "automatic"				4
	CW pump P14200 on	Check back signal	1	EH 14200	5
					6
					7
					8
					9
					10
					11
	Reset trip chill tower	Software button OS	1	HS 14100_RES	12
					13
					14
					15
					16
					17
					18
					19
					20
					21
					22
	Level chill tower	Value < Min	1	LL 14003	23
					24
					25
	Discharge MAC	Value < Min	1	PL 11041	26
					27
					28
					29
	CW pump P14100 on	Check back signal	1	EH 14100	30
					31
					32
					33
					34
					35
					36
					37
					38
	Trip chill tower	from page no. 18/64	1	US 14000	39
					40
					41
					42
					43
					44
					45
					46
					47
					48

Function

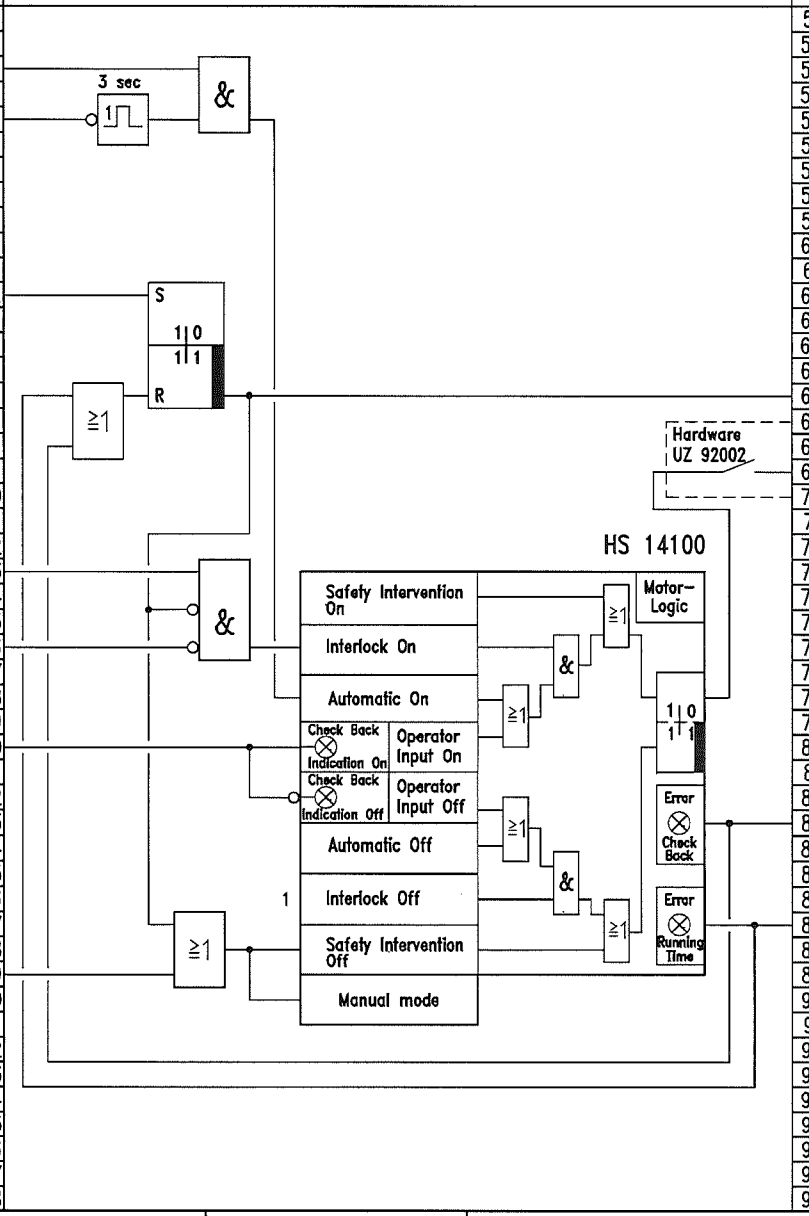

Path	Type	Signal/TAG-No.	Destination	Comment	Rang.
51					
52					
53					
54					
55					
56					
57					
58					
59					
60					
61					
62					
63					
64					
65					
66	1	HS 14100_CB_RT	to page no. 18/18	Alarm fail P14100	
67					
68					
69	1	HS 14100	Signal to MCC	CW pump P14100 on	
70					
71					
72					
73					
74					
75					
76					
77					
78					
79					
80					
81					
82					
83	1	HS 14100_CB	Alarm OS	"Check back error"	
84					
85					
86					
87	1	HS 14100_RT	Alarm OS	"Running time error"	
88					
89					
90					
91					
92					
93					
94					
95					
96					
97					
98					

JOB NO.	FILE NO.	REV.	DATE	REVISIONS	BY	CHKD.
		Rev3	08.6.07	"as built"	Frohn	Stippich
		Rev2	02.2.06		Frohn	Eichler

PROJECT NAME: ASU KOSICE

PLANT PART: CHILL TOWER

AIR LIQUIDE

Air Liquide AGS GmbH
Fütingsweg 34
47805 Krefeld

DRAWING NAME: CHILL TOWER
COOLING WATER PUMP P14100
HS 14100

SIZE: A3

FUNKTION DIAGRAM

DRWG. NO.: K70101_019.dwg

PROJ. NO.: K70101

REPLACES: REPLACED BY: BASED:

DATE: 17.06.2005
AUTHOR: Frohn
CHECK: Eichler
STD.:

Rang.	Comment	Origin	Type	Signal-/TAG-No.	Path
					1
					2
	Motor logic HS14200	Automatic	1		3
	at "automatic"				4
	CW pump P14100 on	Check back signal	1	EH 14100	5
					6
					7
					8
					9
					10
					11
	Reset trip chill tower	Software button OS	1	HS 14200_RES	12
					13
					14
					15
					16
					17
					18
					19
					20
					21
					22
	Level chill tower	Value < Min	1	LL 14003	23
					24
					25
	Discharge MAC	Value < Min	1	PL 11041	26
					27
					28
					29
	CW pump P14100 on	Check back signal	1	EH 14200	30
					31
					32
					33
					34
					35
					36
					37
					38
	Trip chill tower	from page no. 18/68	1	US 14000	39
					40
					41
					42
					43
					44
					45
					46
					47
					48

Function

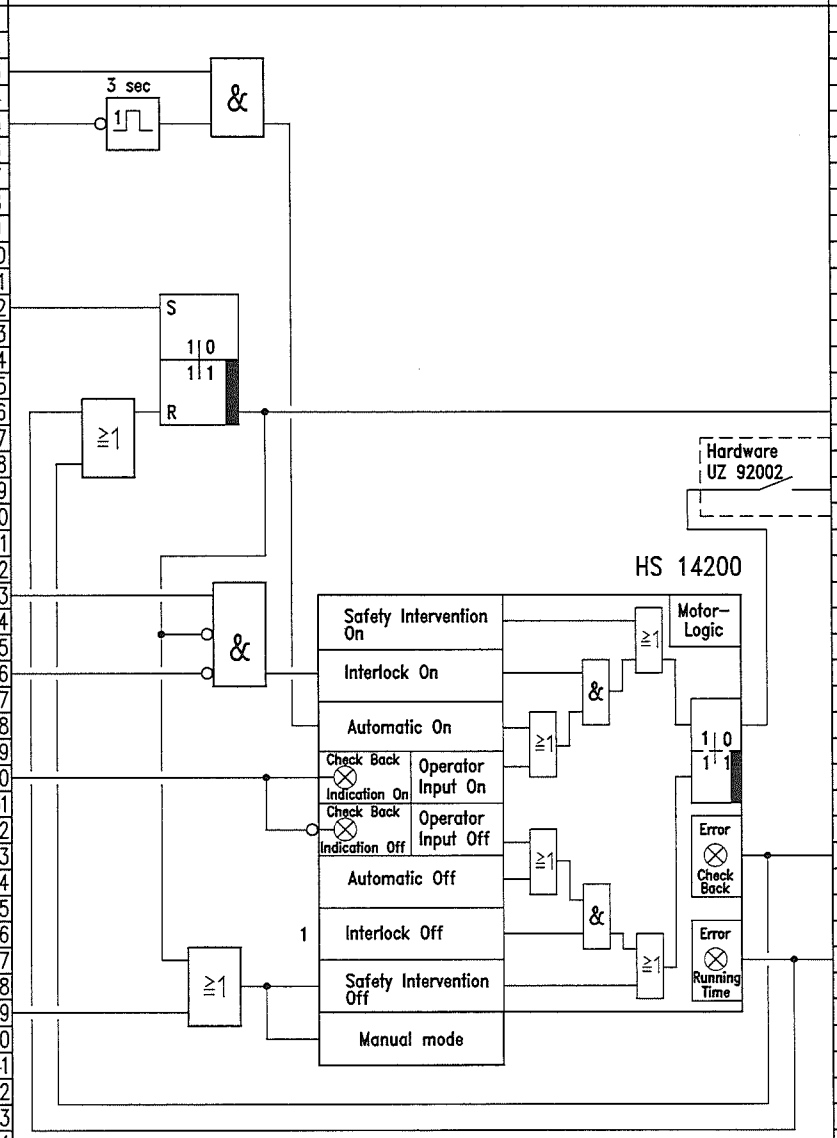

Path	Type	Signal/TAG-No.	Destination	Comment	Rang.
51					
52					
53					
54					
55					
56					
57					
58					
59					
60					
61					
62					
63					
64					
65					
66	1	HS 14200_CB_RT	to page no. 18/20	Alarm fail P14200	
67					
68					
69	1	HS 14200	Signal to MCC	CW pump P14200 on	
70					
71					
72					
73					
74					
75					
76					
77					
78					
79					
80					
81					
82					
83	1	HS 14200_CB	Alarm OS	"Check back error"	
84					
85					
86					
87	1	HS 14200_RT	Alarm OS	"Running time error"	
88					
89					
90					
91					
92					
93					
94					
95					
96					
97					
98					

JOB NO.	FILE NO	REV.	DATE	REVISIONS	BY	CHKD.
		Rev3	08.6.07	"as built"	Frohn	Stippich
		Rev2	02.2.06		Frohn	Eichler

PROJECT NAME: ASU KOSICE

PLANT PART: CHILL TOWER

AIR LIQUIDE

Air Liquide AGS GmbH
Fütingsweg 34
47805 Krefeld

DRAWING NAME:
CHILL TOWER
COOLING WATER PUMP P14200
HS 14200

SIZE: A3 — FUNKTION DIAGRAM

DRWG. NO.: K70101_020.dwg

PROJ. NO.: K70101

REPLACES: REPLACED BY:

DATE: 17.06.2005
AUTHOR: Frohn
CHECK: Eichler
STD.:

Page no. 020
Of 230 Pages
BASED:

Rang.	Comment	Origin	Type	Signal-/TAG-No.	Path
	Discharge MAC	Value < Min	1	PL 11041	8
	Reset trip mol sieve	Software button	1	HS 15000	10
	Trip MAC	from page no. 2/65	1	US 11000	20
	ppm CO2 in air beh.	Value > Max2	1	QHH 15038	23
	mol sieve				24
	Partial trip MAC	from page no. 4/63	1	US 11000_2	26
	Main drive off	from page no. 1/69	0	HS11001	28
	Air to molsieve	Value > Max2	1	THH 13005	31
	Adsorber A15001	Value < Min	1	PL 15012	34
	Adsorber A15002	Value < Min	1	PL 15022	36

Function

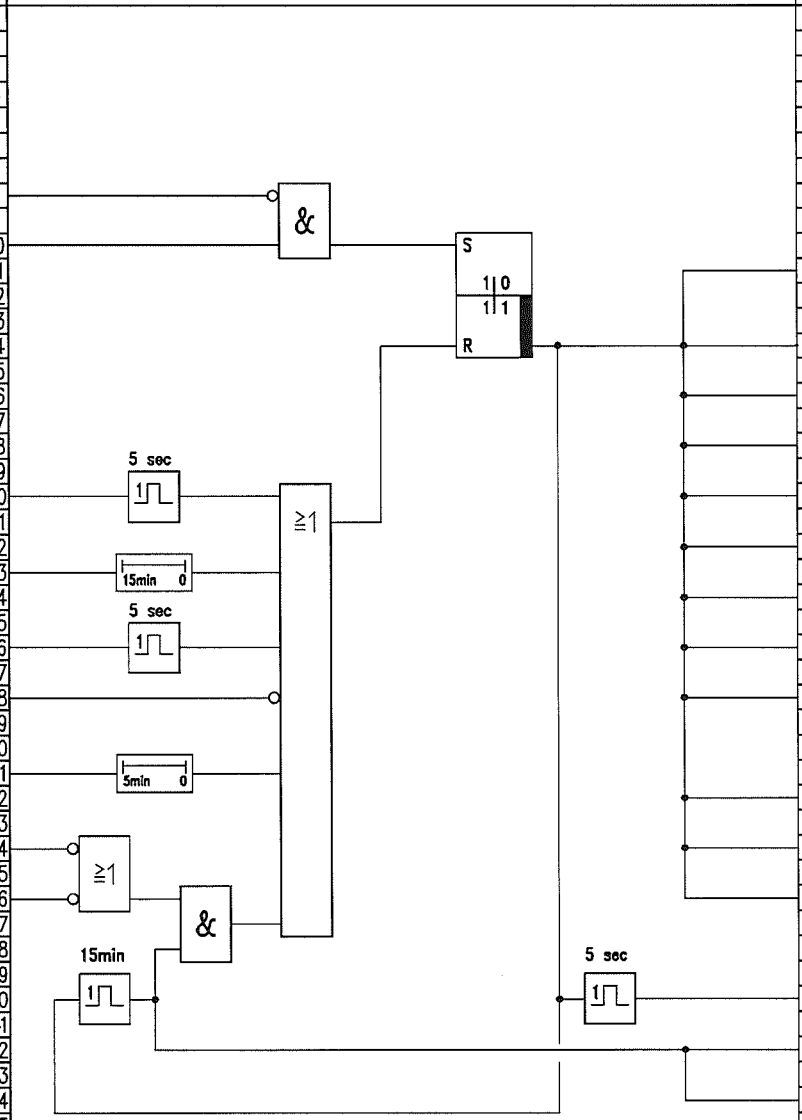

Path	Type	Signal/TAG-No.	Destination	Comment	Rang.
61	1	UA 15000	Alarm OS	"Trip mol sieve"	
64	1	US 15000	to page no. 22/7	MS sequence off	
66	1	US 15000	to sheet 48/38; 60/3	Shut down molsieve	
68	1	US 15000	to sheet 49/38;65/21	Shut down molsieve	
70	1	US 15000	to sheet 53/3; 57/14	Shut down molsieve	
72	1	US 15000	to sheet 59/21;64/14	Shut down molsieve	
74	1	US 15000	to sheet 76/13	Shut down molsieve	
76	1	US 15000	PIC 15037	Self regeneration gas	
			Contr. Manual/Y=0%		
78	1	US 15000	to page no. 100/16	Produce trip cold box	
				US 20000	
82	1	US 15000	to page no. 84/11	Partial trip BAC	
				US 16000_2	
84	1	US 15000	to page no. 85/3	Start conditions BAC	
86	1	US 15000	to page no. 72/13	Shut down molsieve	
90	1	US 15000_dyn	to page no. 4/11	Partial trip MAC	
				US 11000_2	
92	1	US 15000_delay	to page no. 55/7	US 15013	
94	1	US 15000_delay	to page no. 62/7	US 15023	

JOB NO.	FILE NO	REV.	DATE	REVISIONS	BY	CHKD.
		Rev3	08.6.07	"as built"	Frohn	Stippich
		Rev2	02.2.06		Frohn	Eichler

PROJECT NAME: ASU KOSICE

PLANT PART: MOL SIEVE STATION

AIR LIQUIDE

Air Liquide AGS GmbH
Fütingsweg 34
47805 Krefeld

DRAWING NAME: MOL SIEVE STATION TRIP US15000

SIZE: A3 | FUNKTION DIAGRAM

DRWG. NO.: K70101_021.dwg

PROJ. NO.: K70101

REPLACES: | REPLACED BY: | BASED:

DATE: 17.06.2005
AUTHOR: Frohn
CHECK: Eichler
STD.:

Rang.	Comment	Origin	Type	Signal-/TAG-No.	Path
					1
					2
					3
					4
	Mol sieve on / off	Software button	1	HS 15001	5
					6
	Trip mol sieve	from page no. 21/64	1	US 15000	7
					8
	Outlet molsieve	Failure signal	1	P 15035_DF	9
	failure				10
	Outlet adsorber A	from page no. 46/70	1	P 15012_ERR	11
	failure				12
	Outlet adsorber A	from page no. 46/62	1	PL 15012_ERR	13
	Measure fail				14
	Outlet adsorber A	from page no. 46/54	1	PH 15012_ERR	15
	Measure fail				16
	Outlet adsorber B	from page no. 47/70	1	P 15022_ERR	17
	failure				18
	Outlet adsorber B	from page no. 47/62	1	PL 15022_ERR	19
	Measure fail				20
	Outlet adsorber B	from page no. 47/54	1	PH 15022_ERR	21
	Measure fail				22
	Inlet MS adsorber A	from page no. 48/53	1	T 15011_BLOCK	23
					24
	Inlet MS adsorber B	from page no. 49/33	1	T 15021_BLOCK	25
					26
	Own regeneration	Software switch OS	1	HS 15006	27
	Switch on/off				28
	CW pump P13100 on	Check back signal	1	EH 13100	29
					30
	CW pump P13200 on	Check back signal	1	EH 13200	31
					32
	CW pump P14100 on	Check back signal	1	EH 14100	33
					34
	CW pump P14200 on	Check back signal	1	EH 14200	35
					36
	Air inlet mol sieve	Valune < Min	1	PL 15010	37
					38
	Press. air to MHE	Y < 1%	1	HIC 20027	39
					40
	Air to MHE closed	End position switch	1	GL 20026	41
					42
	Air to BAC	Y < 1%	1	PIC 16007	43
					44
					45
					46
					47

Function

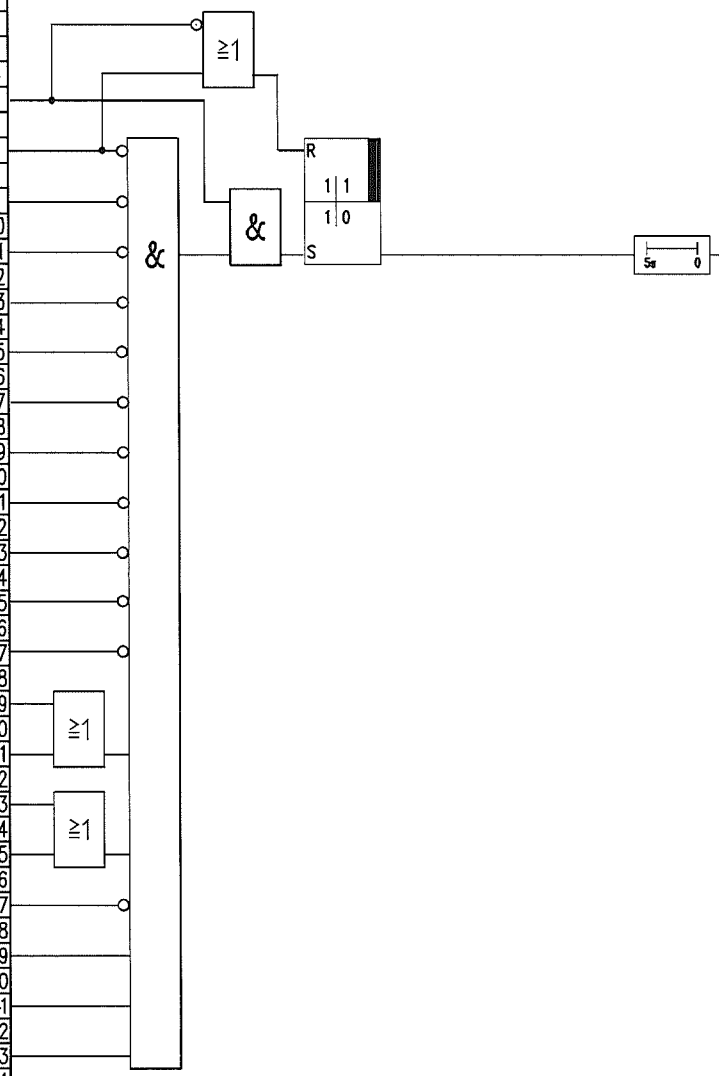

Path	Type	Signal/TAG-No.	Destination	Comment	Rang.
51					
52					
53					
54					
55					
56					
57	1	MS_Start_OK	Monitoring OS		
58					
59					
60					
61	1	MS_Start_OK	to page no. 27/29	Enabling after start	
62					
63	1		to page no. 28/8		
64					
65	1		to page no. 29/9		
66					
67	1		to page no. 30/9		
68					
69	1		to page no. 31/9		
70					
71	1		to page no. 32/9		
72					
73	1		to page no. 33/9		
74					
75	1		to page no. 34/9		
76					
77	1		to page no. 35/9		
78					
79	1		to page no. 36/9		
80					
81	1		to page no. 37/9		
82					
83	1		to page no. 38/9		
84					
85	1		to page no. 39/9		
86					
87	1		to page no. 40/9		
88					
89	1		to page no. 41/9		
90					
91	1		to page no. 42/9		
92					
93	1		to page no. 43/9		
94					
95	1		to page no. 44/9		
96					
97	1		to sheet 66/6;		
98			76/15; 72/15		

JOB NO.	FILE NO	REV.	DATE	REVISIONS	BY	CHKD.
		Rev3	08.6.07	"as built"	Frohn	Stippich
		Rev2	02.2.06		Frohn	Eichler

PROJECT NAME: ASU KOSICE

PLANT PART: MOL SIEVE STATION

AIR LIQUIDE

Air Liquide AGS GmbH
Fütingsweg 34
47805 Krefeld

DRAWING NAME: MOL SIEVE STATION SEQUENCE START / STOP

SIZE: A3 — FUNKTION DIAGRAM

DRWG. NO.: K70101_022.dwg

PROJ. NO.: K70101

REPLACES: REPLACED BY: BASED:

DATE: 17.06.2005
AUTHOR: Frohn
CHECK: Eichler
STD.:

Rang.	Comment	Origin	Type	Signal-/TAG-No.	Path

Function

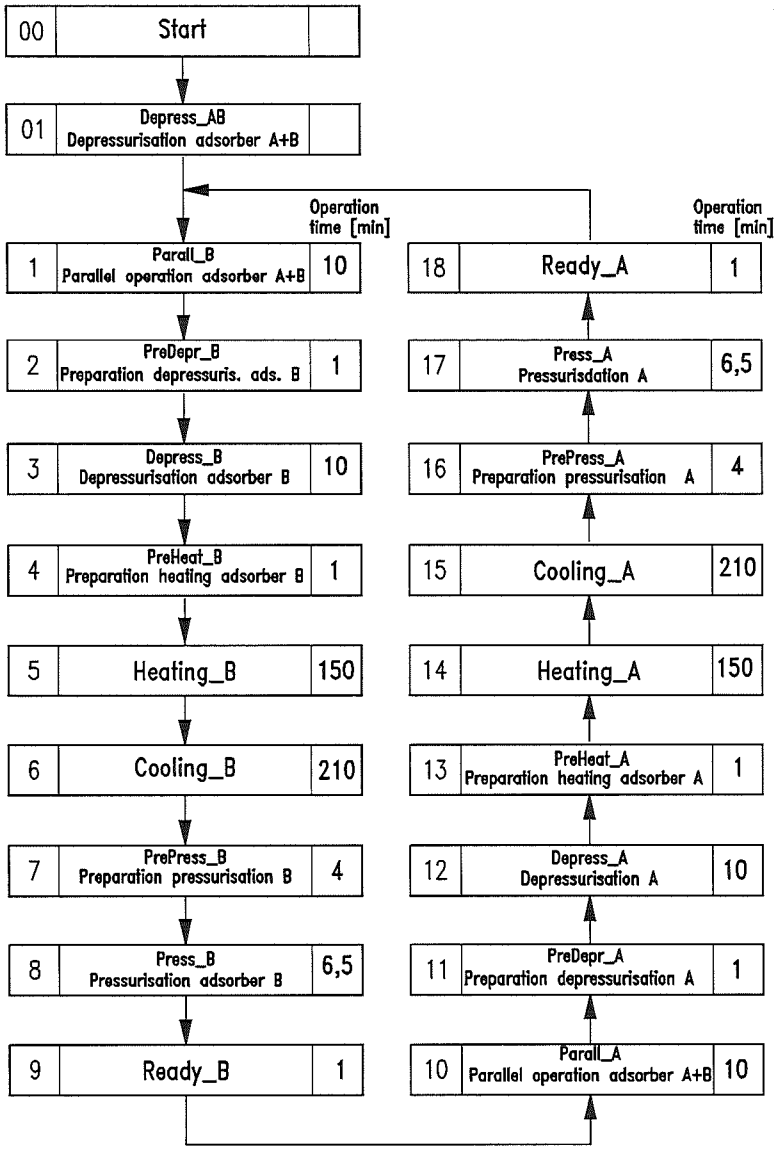

Path	Type	Signal/TAG-No.	Destination	Comment	Rang.

JOB NO.	FILE NO.	REV.	DATE	REVISIONS	BY	CHKD.
		Rev3	08.6.07	"as built"	Frohn	Stippich
		Rev2	02.2.06		Frohn	Eichler

PROJECT NAME: ASU KOSICE

PLANT PART: MOL SIEVE STATION

AIR LIQUIDE

Air Liquide AGS GmbH
Fütingsweg 34
47805 Krefeld

DRAWING NAME: MOL SIEVE STATION

ALL STEPS OF THE MOLECULAR SIEVE SEQUENCE CONTROL

SIZE: A3

FUNKTION DIAGRAM

DRWG. NO.: K70101_023.dwg

PROJ. NO.: K70101

REPLACES: REPLACED BY: BASED:

DATE: 17.06.2005
AUTHOR: Frohn
CHECK: Eichler
STD.:

Actor	Step	00	01	1	2	3	4	5	6	7	8	9	10	11	12	13	14	15	16	17	18
Depressure adsorber A	UK15013		X												X	(X)	(X)	(X)	[X]		
Depressure adsorber B	UK15023		X			X	(X)	(X)	(X)	[X]											
Inlet adsorber A	UK15011			X	X	X	X	X	X	X	X	X	X								
Outlet adsorber A	UK15016			X	X	X	X	X	X	X	X	X	X								X
Inlet adsorber B	UK15021			X									X	X	X	X	X	X	X	X	X
Outlet adsorber B	UK15026			X								X	X	X	X	X	X	X	X	X	X
Outlet reg. gas ads. A	UK15012															X	X	X	[X]		
Inlet reg gas ads. A	UK15014															X	X	X	[X]		
Outlet reg gas. ads. B	UK15022						X	X	X	[X]											
Inlet reg. gas ads. B	UK15024						X	X	X	[X]											
Bypass ads. A+B	UK15017										X	X								X	X
Inlet ads. A bypass	UK15018			X	X	X	X	X	X	X	X	X	X								
Inlet ads. B bypass	UK15028			X									X	X	X	X	X	X	X	X	X
Outlet condensate heat.	TCV15043							X									X				
Inlet reg. gas heater	UK15044							X									X				
Bypass regener. gas	UK15045								X									X			

[X] for 4min

JOB NO.	FILE NO.	REV.	DATE	REVISIONS	BY	CHKD.
		Rev3	08.6.07	"as built"	Frohn	Stippich
		Rev2	02.2.06		Frohn	Eichler

PROJECT NAME: ASU KOSICE

PLANT PART: MOL SIEVE STATION

AIR LIQUIDE

Air Liquide AGS GmbH
Fütingsweg 34
47805 Krefeld

DRAWING NAME: MOL SIEVE STATION
CONTROL DIAGRAM
X = OPEN / RELEASE CONTROL

SIZE: A3 | FUNKTION DIAGRAM

DRWG. NO.: K70101_024.dwg

PROJ. NO.: K70101

REPLACES: | REPLACED BY: | BASED:

DATE: 17.06.2005
AUTHOR: Frohn
CHECK: Eichler
STD.:

Rang.	Comment	Origin	Type	Signal-/TAG-No.	Path
					1
					2
					3
					4
					5
					6
					7
					8
					9
					10
					11
					12
					13
					14
					15
					16
					17
					18
					19
					20
					21
					22
					23
					24
					25
					26
					27
					28
					29
					30
					31
					32
					33
					34
					35
					36
					37
					38
					39
					40
					41
					42
					43
					44
					45
					46
					47
					48

Function

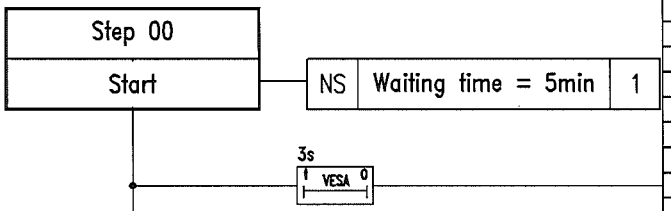

Path	Type	Signal/TAG-No.	Destination	Comment	Rang.
51					
52					
53					
54					
55					
56					
57					
58					
59					
60					
61					
62					
63	1	Waitingtime_I01	to page no. 26/9	Waiting time initial	
64				position	
65					
66					
67	1	KC15001_INIT	to page no. 26/7	Delay initstep 1	
68					
69					
70					
71					
72					
73					
74					
75					
76					
77					
78					
79					
80					
81					
82					
83					
84					
85					
86					
87					
88					
89					
90	1	Initial position	to page no. 26/2	New start sequence	
91					
92	1	Initial position	to page no. 45/3	New start sequence	
93					
94					
95					
96					
97					
98					

JOB NO.	FILE NO.	REV.	DATE	REVISIONS	BY	CHKD.
		Rev3	08.6.07	"as built"	Frohn	Stippich
		Rev2	02.2.06		Frohn	Eichler

PROJECT NAME: ASU KOSICE

PLANT PART: MOL SIEVE STATION

AIR LIQUIDE

Air Liquide AGS GmbH
Fütingsweg 34
47805 Krefeld

DRAWING NAME:
MOL SIEVE STATION
NEW START OF THE SEQUENCE, ALL VALVES AT START POSITION

SIZE: A3

FUNKTION DIAGRAM

DRWG. NO.: K70101_025.dwg

PROJ. NO.: K70101

REPLACES: REPLACED BY: BASED:

DATE: 17.06.2005
AUTHOR: Frohn
CHECK: Eichler
STD.:

Rang.	Comment	Origin	Type	Signal-/TAG-No.	Path
	New start sequence	from page no. 25/90	1	initial position	2
	Delay initstep 1	from page no. 25/67	1	KC15001_INIT	7
	Time over	from page no. 25/63	1	Waitingtime_I01	9
	Stop sequence	Software push button	1	HS 15002	11
	Next step (Step+1)	Software push button	1	HS 15003	14
	Step without cond.	Hand control	1	HS 15005	16
	Switch time valves	from page no. 45/75	1	MS_switch_time	18

Function

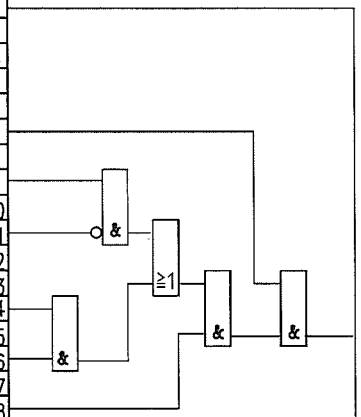

Step 01

Depressurisation adsorber A+B

NS	US 15013	1
NS	US 15023	2
T	Waiting time = 10 min	3
T	Min wait. time = 10 min	4
T	Monitoring = 15 min	5

Path	Type	Signal/TAG-No.	Destination	Comment	Rang.
76	1	Step01_US15013	to page no. 55/11	Open butterfly valve UK15013	
78	1	Step01_US15023	to page no. 62/11	Open butterfly valve UK15023	
80	1	Waitingtime01	to page no. 27/5	Time over	
82	1	Minwaitingtime01	to page no. 27/9	Time over	
84	1	KC15001_TM01	Alarm	"Check time over"	
97	1	Step01	to page no. 27/2	Depress AB	
98	1		to page no. 45/5		

JOB NO.	FILE NO.	REV.	DATE	REVISIONS	BY	CHKD.
		Rev3	08.6.07	"as built"	Frohn	Stippich
		Rev2	02.2.06		Frohn	Eichler

PROJECT NAME: ASU KOSICE

PLANT PART: MOL SIEVE STATION

AIR LIQUIDE

Air Liquide AGS GmbH
Fütingsweg 34
47805 Krefeld

DRAWING NAME: MOL SIEVE STATION DEPRESSURISATION ADSORBER A & B

SIZE: A3 — FUNKTION DIAGRAM

DRWG. NO.: K70101_026.dwg

PROJ. NO.: K70101

REPLACES: REPLACED BY: BASED:

DATE: 17.06.2005
AUTHOR: Frohn
CHECK: Eichler
STD.:

Rang.	Comment	Origin	Type	Signal-/TAG-No.	Path
					1
	Depress AB	from page no. 26/97	1	Step01	2
					3
					4
	Time over	from page no. 26/80	1	Waitingtime01	5
					6
	Next step	Software push button	1	HS 15003	7
					8
	Time over	from page no. 26/82	1	Minwaitingtime01	9
					10
	Adsorber A	from page no. 46/93	1	PL 15012	11
					12
	Adsorber B	from page no. 47/93	1	PL 15022	13
					14
	Stop sequence	Software button	1	HS 15002	15
					16
	Next step	Software push button	1	HS 15003	17
					18
	Step without cond.	Hand control	1	HS 15005	19
	Switch time valves	from page no. 45/76	1	MS_switch_time	20
					21
	Ready_A	from page no. 44/97	1	Step18	22
					23
					24
	Time over	from page no. 44/90	1	Waitingtime18	25
					26
	Next step	Software push button	1	HS 15003	27
					28
	Enabling after start	from page no. 22/61	1	MS_Start_Ok	29
	Adsorber A	from page no. 46/81	1	PH 15012	30
					31
	Stop sequence	Software button	1	HS 15002	32
					33
	Time over	from page no. 44/92	1	Minwaitingtime18	34
	Outlet air ads. A	from page no. 57/81	1	US 15016	35
	BTV 15016 open				36
					37
	Next step	Software push button	1	HS 15003	38
					39
	Step without	Hand control	1	HS 15005	40
	conditions				41
	Switch time valves	from page no. 45/77	1	MS_switch_time	42
					43
					44
					45
					46
					47
					48

Function

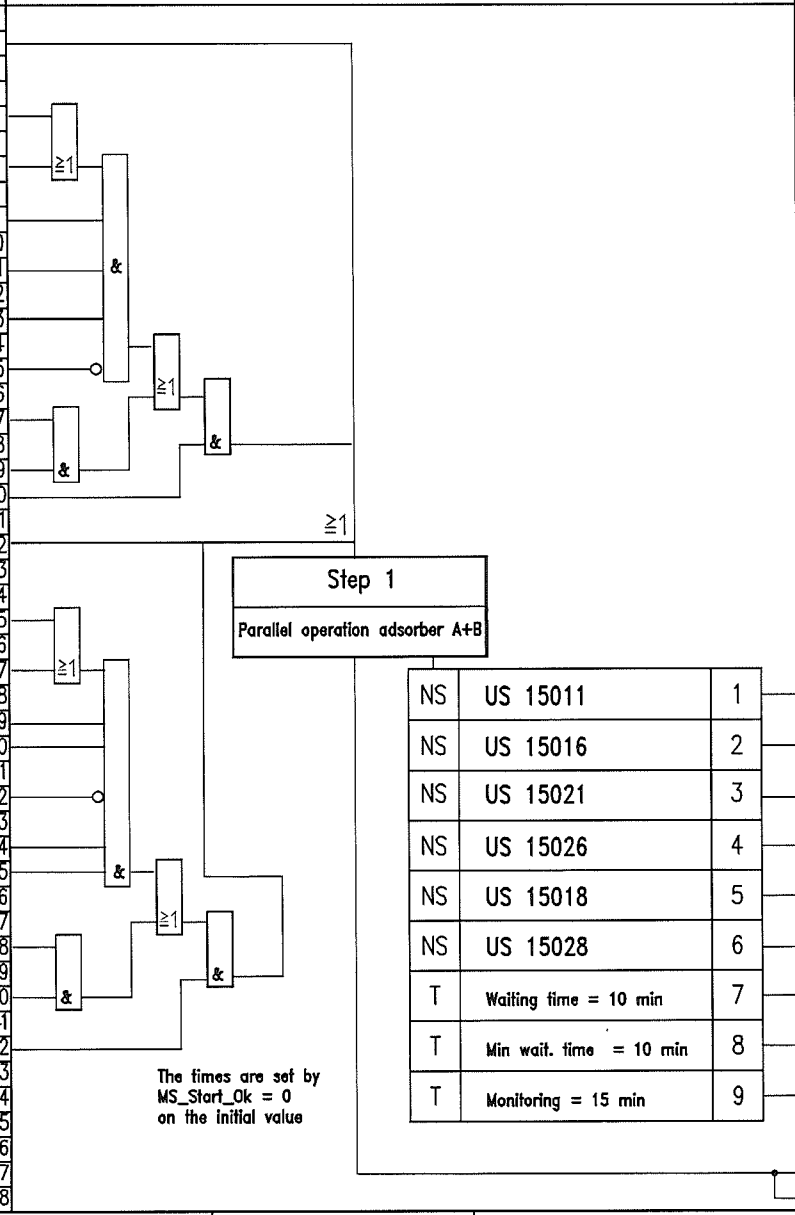

Path	Type	Signal/TAG-No.	Destination	Comment	Rang.
51					
52					
53					
54					
55					
56					
57					
58					
59					
60					
61					
62					
63					
64					
65					
66					
67					
68					
69					
70					
71					
72					
73					
74					
75					
76					
77					
78	1	Step1_US15011	to page no. 53/10	Open butterfly valve	
79				UK 15011	
80	1	Step1_US15016	to page no. 57/20	Open butterfly valve	
81				UK 15016	
82	1	Step1_US15021	to page no. 60/19	Open butterfly valve	
83				UK 15021	
84	1	Step1_US15026	to page no. 63/20	Open butterfly valve	
85				UK 15026	
86	1	Step1_US15018	to page no. 59/10	Open butterfly valve	
87				UK 15018	
88	1	Step1_US15028	to page no. 65/10	Open butterfly valve	
89				UK 15028	
90	1	Waitingtime1	to page no. 28/5	Time over	
91					
92	1	Minwaitingtime1	to page no. 28/12	Time over	
93					
94	1	KC15001_TM1	Alarm	"Check time over"	
95					
96					
97	1	Step1	to page no. 28/2	Parallel_B	
98	1		to page no. 45/7		

JOB NO.	FILE NO.	REV.	DATE	REVISIONS	BY	CHKD.
		Rev3	08.6.07	"as built"	Frohn	Stippich
		Rev2	02.2.06		Frohn	Eichler

PROJECT NAME: ASU KOSICE

PLANT PART: MOL SIEVE STATION

AIR LIQUIDE

Air Liquide AGS GmbH
Fütingsweg 34
47805 Krefeld

DRAWING NAME: MOL SIEVE STATION
PARALLEL OPERATION ADSORBER A & B

SIZE: A3 — FUNKTION DIAGRAM

DATE: 17.06.2005
AUTHOR: Frohn
CHECK: Eichler
STD.:

DRWG. NO.: K70101_027.dwg

PROJ. NO.: K70101

Page no. 027 of 230 Pages

REPLACES: REPLACED BY: BASED:

Rang.	Comment	Origin	Type	Signal-/TAG-No.	Path
					1
	Parallel_B	from page no. 27/97	1	Step1	2
					3
					4
	Time over	from page no. 27/90	1	Waitingtime1	5
					6
	Next step	Software push button	1	HS 15003	7
	Enabling after start	from page no. 22/63	1	MS_Start_Ok	8
	Adsorber A	from page no. 46/80	1	PH 15012	9
					10
	Stop sequence	Software button	1	HS 15002	11
	Time over	from page no. 27/92	1	Minwaitingtime01	12
					13
	BTV 15011 open	End position switch	1	ZH 15011	14
	BTV 15016 open	End position switch	1	ZH 15016	15
	BTV 15011 open	from page no. 53/83	1	US 15011	16
	BTV 15016 open	from page no. 57/83	1	US 15016	17
					18
					19
	Next step	Software push button	1	HS 15003	20
					21
	Step without	Hand control	1	HS 15005	22
	conditions				23
	Switch time valves	from page no. 45/78	1	MS_switch_time	24
					25
					26
					27
					28
					29
					30
					31
					32
					33
					34
					35
					36
					37
					38
					39
					40
					41
					42
					43
					44
					45
					46
					47

Function

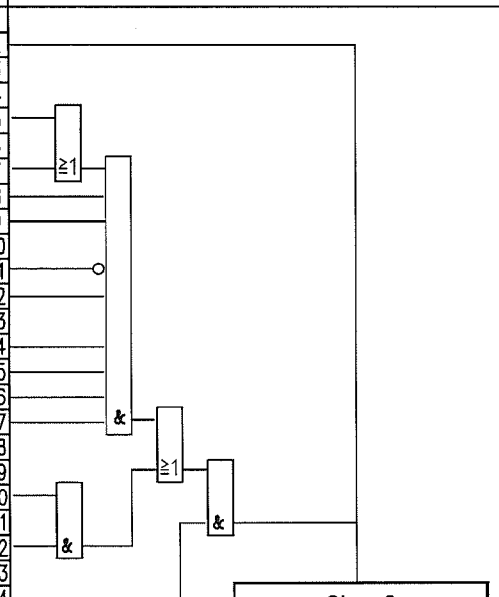

Step 2

Preparation depressurisation B

NS	US 15011	1
NS	US 15016	2
NS	US 15018	3
T	Waiting time = 65 sec	5
T	Min wait. time = 10 sec	6
T	Monitoring = 75 sec	7

The times are set by
MS_Start_Ok = 0
on the initial value

Path	Type	Signal/TAG-No.	Destination	Comment	Rang.
51					
52					
53					
54					
55					
56					
57					
58					
59					
60					
61					
62					
63					
64					
65					
66					
67					
68					
69					
70					
71					
72					
73					
74					
75					
76					
77					
78					
79					
80	1	Step2_US15011	to page no. 53/11	Open butterfly valve	
81				UK 15011	
82	1	Step2_US15016	to page no. 57/21	Open butterfly valve	
83				UK 15016	
84	1	Step2_US15018	to page no. 59/11	Open butterfly valve	
85				UK 15018	
86	1	Waitingtime2	to page no. 29/5	Time over	
87					
88	1	Minwaitingtime2	to page no. 29/15	Time over	
89					
90	1	KC15001_TM2	Alarm	"Check time over"	
91					
92					
93					
94					
95					
96	1		to page no. 47/12		
97	1	Step2	to page no. 29/2	PrepDepr_B	
98	1		to page no. 45/9		

JOB NO.	FILE NO	REV.	DATE	REVISIONS	BY	CHKD.
		Rev3	08.6.07	"as built"	Frohn	Stippich
		Rev2	02.2.06		Frohn	Eichler

PROJECT NAME: ASU KOSICE

PLANT PART: MOL SIEVE STATION

AIR LIQUIDE

Air Liquide AGS GmbH
Fütingsweg 34
47805 Krefeld

DRAWING NAME: MOL SIEVE STATION
PREPARATION DEPRESSURISATION
ADSORBER B

SIZE: A3 — FUNKTION DIAGRAM

DRWG. NO.: K70101_028.dwg

PROJ. NO.: K70101

REPLACES: REPLACED BY: BASED:

DATE: 17.06.2005
AUTHOR: Frohn
CHECK: Eichler
STD.:

Rang.	Comment	Origin	Type	Signal-/TAG-No.	Path
					1
	PrepDepress_B	from page no. 28/97	1	Step2	2
					3
					4
	Time over	from page no. 28/86	1	Waitingtime2	5
					6
	Next step	Software push button	1	HS 15003	7
					8
	Enabling after start	from page no. 22/65	1	MS_Start_Ok	9
					10
					11
					12
	Stop sequence	Software button	1	HS 15002	13
					14
	Time over	from page no. 28/88	1	Minwaitingtime2	15
					16
					17
	Next step	Software push button	1	HS 15003	18
					19
	Step without	Hand control	1	HS 15005	20
	conditions				21
	Switch time valves	from page no. 45/79	1	MS_switch_time	22
					23
					24
					25
					26
					27
					28
					29
					30
					31
					32
					33
					34
					35
					36
					37
					38
					39
					40
					41
					42
					43
					44
					45
					46
					47

Function

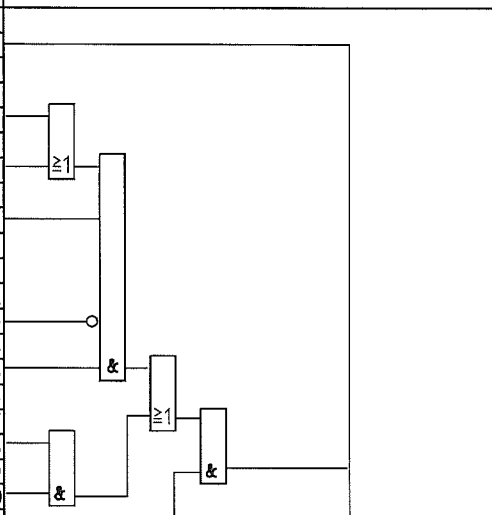

Step 3

Depressurisation adsorber B

NS	US 15023	1
NS	US 15011	2
NS	US 15016	3
NS	US 15018	4
T	Waitingtime = 10 min	5
T	Minwaitingtimet = 2 min	6
T	Monitoring = 15 min	7

The times are set by
MS_Start_Ok = 0
on the initial value

Path	Type	Signal/TAG-No.	Destination	Comment	Rang.
51					
52					
53					
54					
55					
56					
57					
58					
59					
60					
61					
62					
63					
64					
65					
66					
67					
68					
69					
70					
71					
72					
73					
74					
75					
76					
77					
78	1	Step3_US15023	to page no. 63/12	Open butterfly valve	
79				UK 15023	
80	1	Step3_US15011	to page no. 53/12	Open butterfly valve	
81				UK 15011	
82	1	Step3_US15016	to page no. 57/22	Open butterfly valve	
83				UK 15016	
84	1	Step3_US15018	to page no. 59/12	Open butterfly valve	
85				UK 15018	
86	1	Waitingtime3	to page no. 30/5	Time over	
87	1		to page no. 47/47		
88	1	Minwaitingtime3	to page no. 30/15	Time over	
89					
90	1	KC15001_TM3	Alarm	"Check time over"	
91					
92					
93					
94					
95					
96					
97	1	Step3	to page no. 30/2	Depress_B	
98	1		to page no. 45/11		

JOB NO.	FILE NO.	REV.	DATE	REVISIONS	BY	CHKD.
		Rev3	08.6.07	"as built"	Frohn	Slippich
		Rev2	02.2.06		Frohn	Eichler

PROJECT NAME: ASU KOSICE

PLANT PART: MOL SIEVE STATION

AIR LIQUIDE

Air Liquide AGS GmbH
Fütingsweg 34
47805 Krefeld

DRAWING NAME: MOL SIEVE STATION DEPRESSURISATION ADSORBER B

SIZE: A3 — FUNKTION DIAGRAM

DRWG. NO.: K70101_029.dwg

PROJ. NO.: K70101

REPLACES: REPLACED BY: BASED:

DATE: 17.06.2005
AUTHOR: Frohn
CHECK: Eichler
STD.:

Rang.	Comment	Origin	Type	Signal-/TAG-No.	Path
					1
	Depress_B	from page no. 29/97	1	Step3	2
					3
					4
	Time over	from page no. 29/86	1	Waitingtime3	5
					6
	Next step	Software push button	1	HS 15003	7
					8
	Enabling after start	from page no. 22/67	1	MS_Start_Ok	9
					10
	Adsorber B	from page no. 47/92	1	PL 15022	11
					12
	Stop sequence	Software button	1	HS 15002	13
					14
	Time over	from page no. 29/88	1	Minwaitingtime3	15
					16
					17
	Next step	Software push button	1	HS 15003	18
					19
	Step without	Hand control	1	HS 15005	20
	conditions				21
	Switch time valves	from page no. 45/80	1	MS_switch_time	22
					23
					24
					25
					26
					27
					28
					29
					30
					31
					32
					33
					34
					35
					36
					37
					38
					39
					40
					41
					42
					43
					44
					45
					46
					47
					48

Function

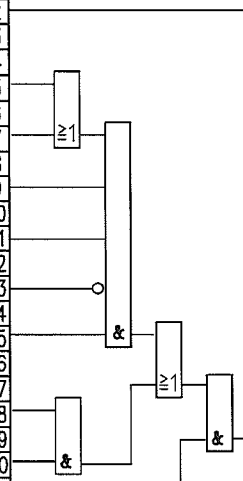

Step 4

Preparation heating adsorber B

NS	US 15023	1
NS	US 15011	2
NS	US 15016	3
NS	US 15022	4
NS	US 15024	5
NS	US 15018	6
T	Waiting time = 125 sec	7
T	Minwaitingtime = 10 sec	8
T	Monitoring = 135 sec	9

The times are set by MS_Start_Ok = 0 on the initial value

Path	Type	Signal/TAG-No.	Destination	Comment	Rang.
51					
52					
53					
54					
55					
56					
57					
58					
59					
60					
61					
62					
63					
64					
65					
66					
67					
68					
69					
70					
71					
72					
73					
74					
75					
76					
77					
78					
79					
80	1	Step4_US15023	to page no. 62/13	Open butterfly valve	
81				UK 15023	
82	1	Step4_US15011	to page no. 53/13	Open butterfly valve	
83				UK 15011	
84	1	Step4_US15016	to page no.t 57/23	Open butterfly valve	
85				UK 15016	
86	1	Step4_US15022	to page no. 61/10	Open butterfly valve	
87				UK 15022	
88	1	Step4_US15024	to page no. 63/11	Open butterfly valve	
89				UK 15024	
90	1	Step4_US15018	to page no. 59/13	Open butterfly valve	
91				UK 15018	
92	1	Waitingtime4	to page no. 31/5	Time over	
93					
94	1	Minwaitingtime4	to page no. 31/15	Time over	
95					
96	1	KC15001_TM4	Alarm	"Check time over"	
97	1		to page no. 45/13		
98	1	Step4	to page no. 31/2	PreHeat_B	

JOB NO.	FILE NO	REV.	DATE	REVISIONS	BY	CHKD.
		Rev3	08.6.07	"as built"	Frohn	Stippich
		Rev2	02.2.06		Frohn	Eichler

PROJECT NAME: ASU KOSICE

PLANT PART: MOL SIEVE STATION

AIR LIQUIDE

Air Liquide AGS GmbH
Fütingsweg 34
47805 Krefeld

DRAWING NAME: MOL SIEVE STATION
PREPARATION HEATING ADSORBER B

SIZE: A3 — FUNKTION DIAGRAM

DRWG. NO.: K70101_030.dwg

PROJ. NO.: K70101

REPLACES: REPLACED BY: BASED:

DATE: 17.06.2005
AUTHOR: Frohn
CHECK: Eichler
STD.:

Rang.	Comment	Origin	Type	Signal-/TAG-No.	Path
					1
	PreHeating_B	from page no. 30/98	1	Step4	2
					3
					4
	Time over	from page no. 30/92	1	Waitingtime4	5
					6
	Next step	Software push button	1	HS 15003	7
					8
	Enabling after start	from page no. 22/69	1	MS_Start_Ok	9
					10
	Adsorber B	from page no. 47/91	1	PL 15022	11
					12
	Stop sequence	Software button	1	HS 15002	13
					14
	Time over	from page no. 30/94	1	Minwaitingtime04	15
					16
					17
	Next step	Software push button	1	HS 15003	18
					19
	Step without	Hand control	1	HS 15005	20
	conditions				21
	Switch time valves	from page no. 45/81	1	MS_switch_time	22
					23
					24
					25
					26
					27
					28
					29
					30
					31
					32
					33
					34
					35
					36
					37
					38
					39
					40
					41
					42
					43
					44
					45
					46
					47
					48

Function

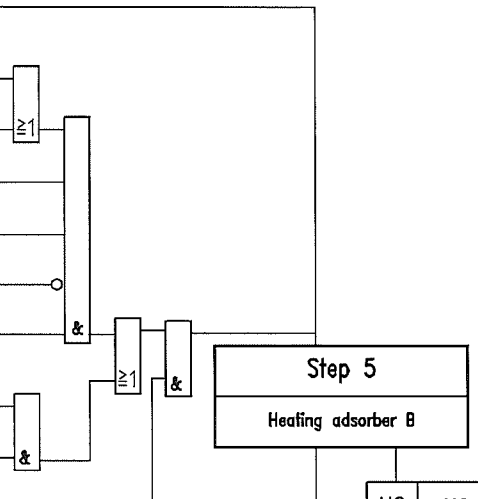

Step 5

Heating adsorber B

NS	US 15023	1
NS	US 15011	2
NS	US 15016	3
NS	US 15022	4
NS	US 15024	5
NS	US 15018	6
NS	US 15040	7
NS	TIC 15043	8
NS	US 15044	9
NS	US 15037	10
T	Waiting time = 150 min	11
T	Minwaitingtime = 120 min	12
T	Monitoring = 160 min	13

The times are set by MS_Start_Ok = 0 on the initial value

Path	Type	Signal/TAG-No.	Destination	Comment	Rang.
51					
52					
53					
54					
55					
56					
57					
58					
59					
60					
61					
62					
63					
64					
65					
66					
67					
68					
69					
70					
71					
72	1	Step5_US15023	to page no. 62/14	Open butterfly valve	
73				UK 15023	
74	1	Step5_US15011	to page no. 53/14	Open butterfly valve	
75				UK 15011	
76	1	Step5_US15016	to page no. 57/24	Open butterfly valve	
77				UK 15016	
78	1	Step5_US15022	to page no. 61/11	Open butterfly valve	
79				UK 15022	
80	1	Step5_US15024	to page no. 63/12	Open butterfly valve	
81				UK 15024	
82	1	Step5_US15018	to page no. 59/14	Open butterfly valve	
83				UK 15018	
84	1	Step5_US15040	to page no. 66/18	Reg. gas heater on	
85					
86	1	Step5_T15043	to page no. 75/38	Controller on Auto	
87					
88	1	Step5_US15044	to page no. 76/11	Open butterfly valve	
89				UK 15044	
90	1	Step5_US15037	to page no. 77/10	Own regeneration	
91				PCV 15037	
92	1	Waitingtime5	to page no. 32/5	Time over	
93	1		to page no. 49/16		
94	1	Minwaitingtime5	to page no. 32/15	Time over	
95					
96	1	KC15001_TM5	Alarm	"Check time over"	
97	1		to page no. 45/15; 49/30; 51/11; 52/12;73/29		
98	1	Step5	to page no. 32/2	Heating_B	

JOB NO.	FILE NO.	REV.	DATE	REVISIONS	BY	CHKD.
		Rev3	08.6.07	"as built"	Frohn	Stippich
		Rev2	02.2.06		Frohn	Eichler

PROJECT NAME: ASU KOSICE

PLANT PART: MOL SIEVE STATION

AIR LIQUIDE

Air Liquide AGS GmbH
Fütingsweg 34
47805 Krefeld

DRAWING NAME: MOL SIEVE STATION HEATING ADSOBER B

SIZE: A3

FUNKTION DIAGRAM

DRWG. NO.: K70101_031.dwg

PROJ. NO.: K70101

REPLACES: REPLACED BY: BASED:

DATE: 17.06.2005
AUTHOR: Frohn
CHECK: Eichler
STD.:

Function

Rang.	Comment	Origin	Type	Signal-/TAG-No.	Path
					1
	Heating_B	from page no. 31/98	1	Step5	2
					3
					4
	Time over	from page no. 31/92	1	Waitingtime5	5
					6
	Next step	Software push button	1	HS 15003	7
					8
	Enabling after start	from page no. 22/71	1	MS_Start_Ok	9
					10
	Adsorber B	from page no. 47/90	1	PL 15022	11
	Outlet reg. gas B	from page no. 49/62	1	TH 15021	12
	Stop sequence	Software button	1	HS 15002	13
					14
	Time over	from page no. 31/94	1	Minwaitingtime5	15
					16
					17
	Next step	Software push button	1	HS 15003	18
					19
	Step without	Hand control	1	HS 15005	20
	conditions				21
	Switch time valves	from page no. 45/82	1	MS_switch_time	22
					23
					24
					25
					26
					27
					28
					29
					30
					31
					32
					33
					34
					35
					36
					37
					38
					39
					40
					41
					42
					43
					44
					45
					46
					47
					48

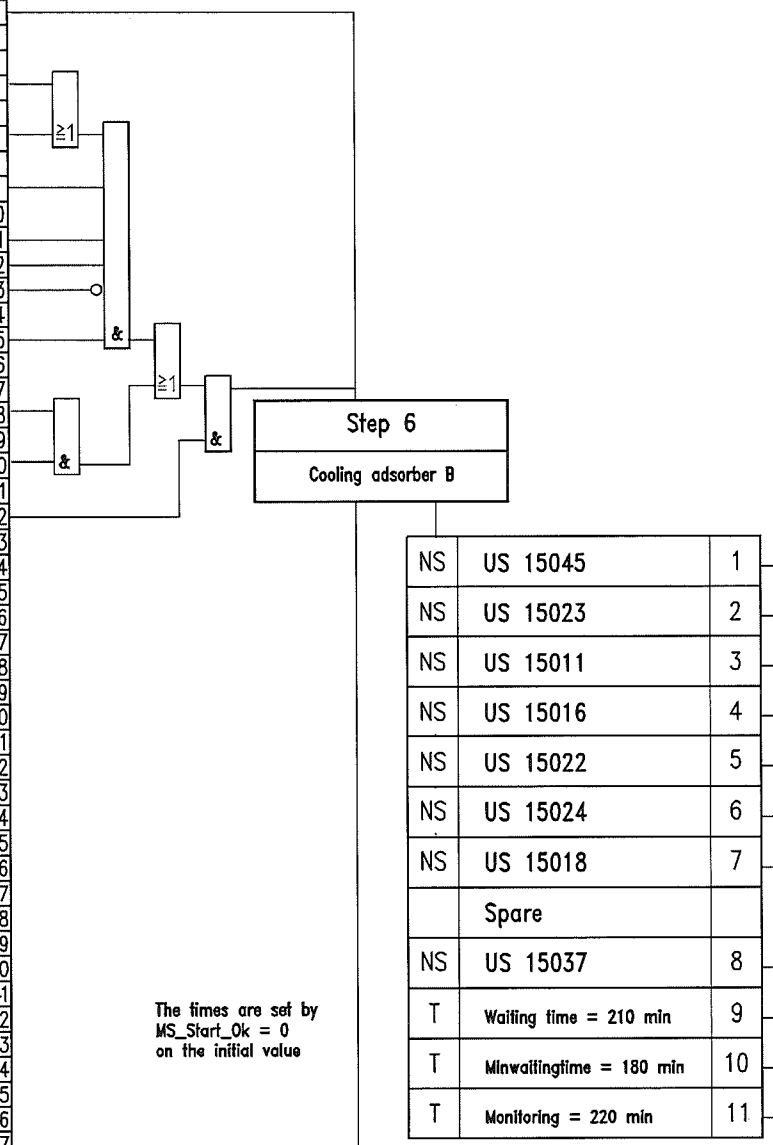

Path	Type	Signal/TAG-No.	Destination	Comment	Rang.
51					
52					
53					
54					
55					
56					
57					
58					
59					
60					
61					
62					
63					
64					
65					
66					
67					
68					
69					
70					
71					
72					
73					
74	1	Step6_US15045	to page no. 72/11	Open butterfly valve	
75				UK 15045	
76	1	Step6_US15023	to page no. 62/15	Open butterfly valve	
77				UK 15023	
78	1	Step6_US15011	to page no. 53/15	Open butterfly valve	
79				UK 15011	
80	1	Step6_US15016	to page no. 57/25	Open butterfly valve	
81				UK 15016	
82	1	Step6_US15022	to page no. 61/12	Open butterfly valve	
83				UK 15022	
84	1	Step6_US15024	to page no. 63/13	Open butterfly valve	
85				UK 15024	
86	1	Step6_US15018	to page no. 59/15	Open butterfly valve	
87				UK 15018	
88					
89					
90	1	Step6_US15037	to page no. 77/14	Own regeneration	
91				PCV 15037	
92	1	Waitingtime6	to page no. 33/5	Time over	
93	1		to page no. 49/24		
94	1	Minwaitingtime6	to page no. 33/15	Time over	
95					
96	1	KC15001_TM6	Alarm	"Check time over"	
97	1		to sheet 45/17; 49/45; 69/27; 73/24		
98	1	Step6	to page no. 33/2	Cooling_B	

JOB NO.	FILE NO	REV.	DATE	REVISIONS	BY	CHKD.
		Rev3	08.6.07	"as built"	Frohn	Stippich
		Rev2	02.2.06		Frohn	Eichler

PROJECT NAME: ASU KOSICE

PLANT PART: MOL SIEVE STATION

AIR LIQUIDE

Air Liquide AGS GmbH
Fütingsweg 34
47805 Krefeld

DRAWING NAME: MOL SIEVE STATION COOLING ADSORBER B

SIZE: A3 | FUNKTION DIAGRAM

DRWG. NO.: K70101_032.dwg

PROJ. NO.: K70101

REPLACES: | REPLACED BY: | BASED:

DATE: 17.06.2005
AUTHOR: Frohn
CHECK: Eichler
STD.:

Rang.	Comment	Origin	Type	Signal-/TAG-No.	Path
					1
	Cooling_B	from page no. 32/98	1	Step6	2
					3
					4
	Time over	from page no. 32/92	1	Waitingtime6	5
					6
	Next step	Software push button	1	HS 15003	7
					8
	Enabling after start	from page no. 22/73	1	MS_Start_Ok	9
					10
	Outlet reg. gas B	from page no. 49/71	1	TL 15021	11
					12
	Stop sequence	Software button	1	HS 15002	13
					14
	Time over	from page no. 32/94	1	Minwaitingtime6	15
					16
					17
	Next step	Software push button	1	HS 15003	18
					19
	Step without	Hand control	1	HS 15005	20
	conditions				21
	Switch time valves	from page no. 45/83	1	MS_switch_time	22
					23
					24
					25
					26
					27
					28
					29
					30
					31
					32
					33
					34
					35
					36
					37
					38
					39
					40
					41
					42
					43
					44
					45
					46
					47

Function

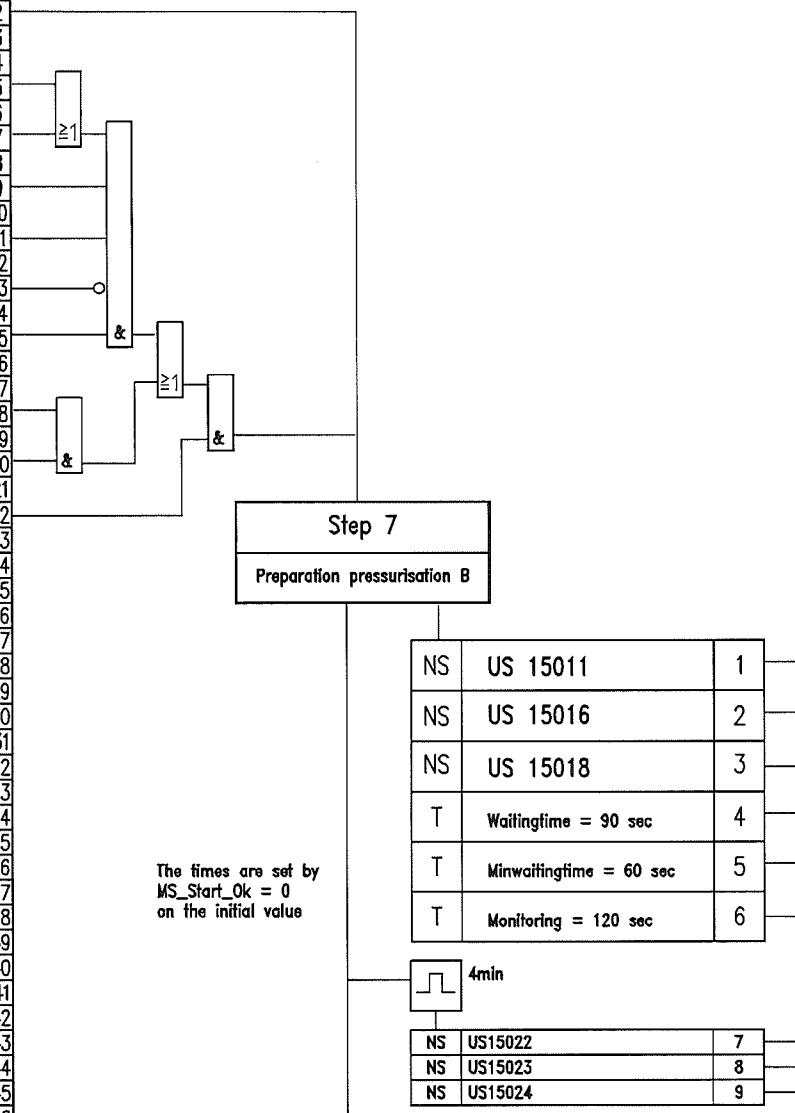

Path	Type	Signal/TAG-No.	Destination	Comment	Rang.
51					
52					
53					
54					
55					
56					
57					
58					
59					
60					
61					
62					
63					
64					
65					
66					
67					
68					
69					
70					
71					
72					
73					
74					
75					
76					
77					
78	1	Step7_US15011	to page no. 53/16	Open butterfly valve	
79				UK 15011	
80	1	Step7_US15016	to page no. 57/26	Open butterfly valve	
81				UK 15016	
82	1	Step7_US15018	to page no 59/16	Open butterfly valve	
83				UK 15018	
84	1	Waitingtime7	to page no. 34/5	Time over	
85					
86	1	Minwaitingtime7	to page no. 34/15	Time over	
87					
88	1	KC15001_TM7	Alarm	"Check time over"	
89					
90					
91					
92					
93	1	Step7_US15022	to page no. 63/13	Open UK15022	
94	1	Step7_US15023	to page no. 64/16	Open UK15023	
95	1	Step7_US14024	to page no. 63/14	Open UK15024	
96	1		to page no. 47/4		
97	1	Step7	to page no. 34/2	PrePress_B	
98	1		to page no. 45/19		

JOB NO.	FILE NO	REV.	DATE	REVISIONS	BY	CHKD.
		Rev3	08.6.07	"as built"	Frohn	Stippich
		Rev2	02.2.06		Frohn	Eichler

PROJECT NAME: ASU KOSICE

PLANT PART: MOL SIEVE STATION

AIR LIQUIDE

Air Liquide AGS GmbH
Fütingsweg 34
47805 Krefeld

DRAWING NAME:
MOL SIEVE STATION
PREPARATION PRESSURISATION
ADSORBER B

SIZE A3 | FUNKTION DIAGRAM

DRWG. NO. K70101_033.dwg

PROJ. NO. K70101

REPLACES: | REPLACED BY: | BASED:

DATE 17.06.2005
AUTHOR Frohn
CHECK Eichler
STD.

Rang.	Comment	Origin	Type	Signal-/TAG-No.	Path
					1
	PrepPress_B	from page no. 33/97	1	Step7	2
					3
					4
	Time over	from page no. 33/84	1	Waitingtime7	5
					6
	Next step	Software push button	1	HS 15003	7
					8
	Enabling after start	from page no. 22/75	1	MS_Start_Ok	9
					10
					11
					12
	Stop sequence	Software button	1	HS 15002	13
					14
	Time over	from page no. 33/86	1	Minwaitingtime7	15
					16
					17
	Next step	Software push button	1	HS 15003	18
					19
	Step without	Hand control	1	HS 15005	20
	conditions				21
	Switch time valves	from page no. 45/84	1	MS_switch_time	22
					23
					24
					25
					26
					27
					28
					29
					30
					31
					32
					33
					34
					35
					36
					37
					38
					39
					40
					41
					42
					43
					44
					45
					46
					47
					48

Function

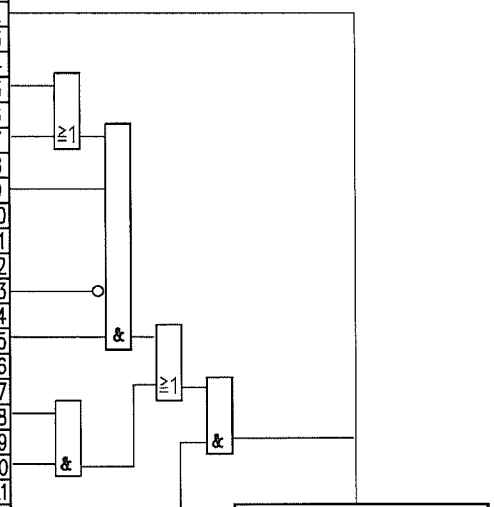

Step 8

Pressurisation adsorber B

NS	US 15011	1
NS	US 15016	2
NS	US 15017	3
NS	US 15018	4
T	Waitingtime = 10 min	5
T	Minwaitingtime = 2 min	6
T	Monitoring = 15 min	7

The times are set by
MS_Start_Ok = 0
on the initial value

Path	Type	Signal/TAG-No.	Destination	Comment	Rang.
51					
52					
53					
54					
55					
56					
57					
58					
59					
60					
61					
62					
63					
64					
65					
66					
67					
68					
69					
70					
71					
72					
73					
74					
75					
76					
77					
78	1	Step8_US15011	to page no. 53/17	Open butterfly valve	
79				UK 15011	
80	1	Step8_US15016	to page no. 57/27	Open butterfly valve	
81				UK 15016	
82	1	Step8_US15017	to page no. 58/11	Open butterfly valve	
83				UK 15017	
84	1	Step8_US15018	to page no. 59/17	Open butterfly valve	
85				UK 15018	
86	1	Waitingtime8	to page no. 35/5	Time over	
87	1		to page no. 47/36		
88	1	Minwaitingtime8	to page no. 35/15	Time over	
89					
90	1	KC15001_TM8	Alarm	"Check time over"	
91					
92					
93					
94					
95					
96					
97	1	Step8	to page no. 35/2	Press_B	
98	1		to page no. 45/21;	79/5	

JOB NO.	FILE NO	REV.	DATE	REVISIONS	BY	CHKD.
		Rev3	08.6.07	"as built"	Frohn	Stippich
		Rev2	02.2.06		Frohn	Eichler

PROJECT NAME: ASU KOSICE

PLANT PART: MOL SIEVE STATION

AIR LIQUIDE

Air Liquide AGS GmbH
Fütingsweg 34
47805 Krefeld

DRAWING NAME: MOL SIEVE STATION
PRESSURISATION ADSORBER B

SIZE: A3 — FUNKTION DIAGRAM

DRWG. NO.: K70101_034.dwg

PROJ. NO.: K70101

REPLACES: REPLACED BY: BASED:

DATE: 17.06.2005
AUTHOR: Frohn
CHECK: Eichler
STD.:

Page no. 034
Of 230 Pages

Rang.	Comment	Origin	Type	Signal-/TAG-No.	Path
					1
	Press_B	from page no. 34/97	1	Step8	2
					3
					4
	Time over	from page no. 34/86	1	Waitingtime8	5
					6
	Next step	Software push button	1	HS 15003	7
					8
	Enabling after start	from page no. 22/77	1	MS_Start_Ok	9
					10
	Adsorber B	from page no. 47/79	1	PH 15022	11
					12
	Stop sequence	Software button	1	HS 15002	13
					14
	Time over	from page no. 34/88	1	Minwaitingtime8	15
					16
					17
	Next step	Software push button	1	HS 15003	18
					19
	Step without	Hand control	1	HS 15005	20
	conditions				21
	Switch time valves	from page no. 45/85	1	MS_switch_time	22
					23
					24
					25
					26
					27
					28
					29
					30
					31
					32
					33
					34
					35
					36
					37
					38
					39
					40
					41
					42
					43
					44
					45
					46
					47

Function

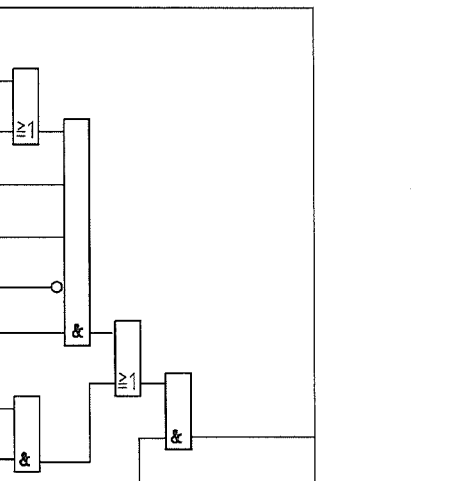

Step 9

Ready adsorber B

NS	US 15011	1
NS	US 15016	2
NS	US 15026	3
NS	US 15017	4
NS	US 15018	5
T	Waiting time = 65 sec	6
T	Minwaitingtime = 10 sec	7
T	Monitoring = 75 sec	8

The times are set by MS_Start_Ok = 0 on the initial value

Path	Type	Signal/TAG-No.	Destination	Comment	Rang.
51					
52					
53					
54					
55					
56					
57					
58					
59					
60					
61					
62					
63					
64					
65					
66					
67					
68					
69					
70					
71					
72					
73					
74					
75					
76					
77					
78					
79					
80	1	Step9_US15011	to page no. 53/18	Open butterfly valve	
81				UK 15011	
82	1	Step9_US15016	to page no. 57/28	Open butterfly valve	
83				UK 15016	
84	1	Step9_US15026	to page no. 64/21	Open butterfly valve	
85				UK 15026	
86	1	Step9_US15017	to page no. 58/12	Open butterfly valve	
87				UK 15017	
88	1	Step9_US15018	to page no. 59/18	Open butterfly valve	
89				UK 15018	
90	1	Waitingtime9	to page no. 36/5	Time over	
91					
92	1	Minwaitingtime9	to page no. 36/15	Time over	
93					
94	1	KC 15001_TM9	Alarm	"Check time over"	
95					
96					
97	1	Step9	to page no. 36/2	Ready_B	
98	1		to Page no. 45/23		

JOB NO.	FILE NO.	REV.	DATE	REVISIONS	BY	CHKD.
		Rev3	08.6.07	"as built"	Frohn	Stippich
		Rev2	02.2.06		Frohn	Eichler

PROJECT NAME: ASU KOSICE

PLANT PART: MOL SIEVE STATION

AIR LIQUIDE

Air Liquide AGS GmbH
Fütingsweg 34
47805 Krefeld

DRAWING NAME: MOL SIEVE STATION READY ADSORBER B

SIZE A3 — FUNKTION DIAGRAM

DRWG. NO. K70101_035.dwg

PROJ. NO. K70101

REPLACES: REPLACED BY: BASED:

DATE 17.06.2005
AUTHOR Frohn
CHECK Eichler
STD.

Rang.	Comment	Origin	Type	Signal-/TAG-No.	Path
					1
	Ready_B	from page no. 35/97	1	Step9	2
					3
					4
	Time over	from page no. 35/90	1	Waitingtime9	5
					6
	Next step	Software push button	1	HS 15003	7
					8
	Enabling after start	from page no. 22/79	1	MS_Start_Ok	9
					10
	Adsorber B	from page no. 47/78	1	PH 15022	11
					12
	Stop sequence	Software button	1	HS 15002	13
					14
	Time over	from page no. 35/92	1	Minwaitingtime9	15
					16
	Outlet air ads. B	from page no. 64/81	1	GH 15026	17
	BTV 15026 open				18
	Next step	Software push button	1	HS 15003	19
					20
	Step without	Hand control	1	HS 15005	21
	conditions				22
	Switch time valves	from sheet 47/86	1	MS_switch_time	23
					24
					25
					26
					27
					28
					29
					30
					31
					32
					33
					34
					35
					36
					37
					38
					39
					40
					41
					42
					43
					44
					45
					46
					47
					48

Function

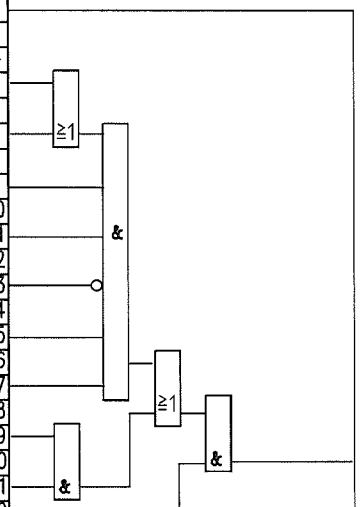

Step 10

Parallel operation adsorber A+B

NS	US 15011	1
NS	US 15016	2
NS	US 15021	3
NS	US 15026	4
NS	US 15018	5
NS	US 15028	6
T	Waiting time = 10 min	7
T	Min wait. time = 10 min	8
T	Monitoring = 15 min	9

The times are set by MS_Start_Ok = 0 on the initial value

Path	Type	Signal/TAG-No.	Destination	Comment	Rang.
51					
52					
53					
54					
55					
56					
57					
58					
59					
60					
61					
62					
63					
64					
65					
66					
67					
68					
69					
70					
71					
72					
73					
74					
75					
76					
77					
78	1	Step10_US15011	to page no. 53/19	Open butterfly valve	
79				UK 15011	
80	1	Step10_US15016	to page no. 57/29	Open butterfly valve	
81				UK 15016	
82	1	Step10_US15021	to page no. 60/10	Open butterfly valve	
83				UK 15021	
84	1	Step10_US15026	to page no. 64/22	Open butterfly valve	
85				UK 15026	
86	1	Step10_US15018	to page no. 59/19	Open butterfly valve	
87				UK 15018	
88	1	Step10_US15028	to page no. 65/11	Open butterfly valve	
89				UK 15028	
90	1	Waitingtime10	to page no. 37/5	Time over	
91					
92	1	Minwaitingtime10	to page no. 37/12	Time over	
93					
94	1	KC15001_TM10	Alarm	"Check time over"	
95					
96					
97	1	Step1	to page no. 37/2	Parallel_A	
98	1		to page no. 45/25		

JOB NO.	FILE NO	REV.	DATE	REVISIONS	BY	CHKD.
		Rev3	08.6.07	"as built"	Frohn	Stippich
		Rev2	02.2.06		Frohn	Eichler

PROJECT NAME: ASU KOSICE

PLANT PART: MOL SIEVE STATION

AIR LIQUIDE

Air Liquide AGS GmbH
Fütingsweg 34
47805 Krefeld

DRAWING NAME: MOL SIEVE STATION
PARALLEL OPERATION
ADSORBER A & B

SIZE A3 — FUNKTION DIAGRAM

DATE 17.06.2005
AUTHOR Frohn
CHECK Eichler
STD.

DRWG. NO. K70101_036.dwg

PROJ. NO. K70101

Page no. 036
Of 230 Pages

REPLACES: REPLACED BY: BASED:

Rang.	Comment	Origin	Type	Signal-/TAG-No.	Path
					1
	Parallel_A	from page no. 36/97	1	Step10	2
					3
					4
	Time over	from page no. 36/90	1	Waitingtime10	5
					6
	Next step	Software push button	1	HS 15003	7
	Enabling after start	from page no. 22/81	1	MS_Start_Ok	8
	Adsorber B	from page no. 47/77	1	PH 15022	9
					10
	Stop sequence	Software button	1	HS 15002	11
	Time over	from page no. 36/92	1	Minwaitingtime10	12
					13
	BTV 15021 open	End position switch	1	GH 15021	14
	BTV 15026 open	End position switch	1	GH 15026	15
	BTV 15021 open	from page no. 60/83	1	US 15021	16
	BTV 15026 open	from page no. 64/83	1	US 15026	17
					18
					19
	Next step	Software push button	1	HS 15003	20
					21
	Step without	Hand control	1	HS 15005	22
	conditions				23
	Switch time valves	from page no. 45/87	1	MS_switch_time	24
					25
					26
					27
					28
					29
					30
					31
					32
					33
					34
					35
					36
					37
					38
					39
					40
					41
					42
					43
					44
					45
					46
					47

Function

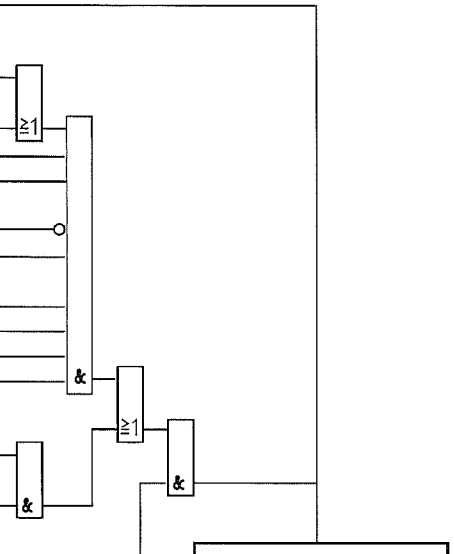

Step 11

Preparation depressurisation A

NS	US 15021	1
NS	US 15026	2
NS	US 15028	3
T	Waiting time = 65 sec	5
T	Min wait. time = 10 sec	6
T	Monitoring = 75 sec	7

The times are set by
MS_Start_Ok = 0
on the initial value

Path	Type	Signal/TAG-No.	Destination	Comment	Rang.
51					
52					
53					
54					
55					
56					
57					
58					
59					
60					
61					
62					
63					
64					
65					
66					
67					
68					
69					
70					
71					
72					
73					
74					
75					
76					
77					
78					
79					
80	1	Step11_US15021	to page no. 60/11	Open butterfly valve	
81				UK 15021	
82	1	Step11_US15026	to page no. 64/23	Open butterfly valve	
83				UK 15026	
84	1	Step11_US15028	to page no. 65/12	Open butterfly valve	
85				UK 15028	
86	1	Waitingtime11	to page no. 38/5	Time over	
87					
88	1	Minwaitingtime11	to page no. 38/15	Time over	
89					
90	1	KC15001_TM11	Alarm	"Check time over"	
91					
92					
93					
94					
95					
96	1		to page no. 46/12		
97	1	Step11	to page no. 38/2	PrepDepr_A	
98	1		to page no. 45/27		

JOB NO.	FILE NO.	REV.	DATE	REVISIONS	BY	CHKD.
		Rev3	08.6.07	"as built"	Frohn	Stippich
		Rev2	02.2.06		Frohn	Eichler

PROJECT NAME: ASU KOSICE

PLANT PART: MOL SIEVE STATION

AIR LIQUIDE

Air Liquide AGS GmbH
Fütingsweg 34
47805 Krefeld

DRAWING NAME:
MOL SIEVE STATION
PREPARATION DEPRESSURISATION
ADSOBER A

SIZE: A3

FUNKTION DIAGRAM

DRWG. NO.: K70101_037.dwg

PROJ. NO.: K70101

REPLACES: REPLACED BY: BASED:

DATE: 17.06.2005
AUTHOR: Frohn
CHECK: Eichler
STD.:

Rang.	Comment	Origin	Type	Signal-/TAG-No.	Path
					1
	PrepDepress_A	from page no. 37/97	1	Step11	2
					3
					4
	Time over	from page no. 37/86	1	Waitingtime11	5
					6
	Next step	Software push button	1	HS 15003	7
					8
	Enabling after start	from page no. 22/83	1	MS_Start_Ok	9
					10
					11
					12
	Stop sequence	Software button	1	HS 15002	13
					14
	Time over	from page no. 37/88	1	Minwaitingtime11	15
					16
					17
	Next step	Software push button	1	HS 15003	18
					19
	Step without	Hand control	1	HS 15005	20
	conditions				21
	Switch time valves	from page no. 45/88	1	MS_switch_time	22
					23
					24
					25
					26
					27
					28
					29
					30
					31
					32
					33
					34
					35
					36
					37
					38
					39
					40
					41
					42
					43
					44
					45
					46
					47
					48

Function

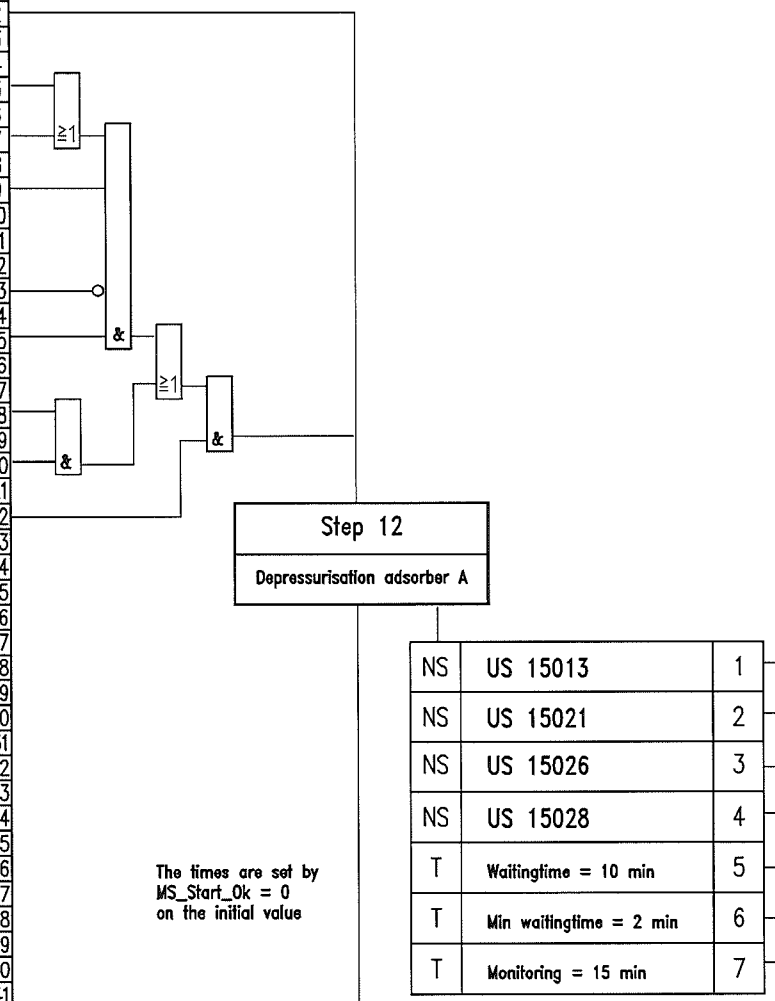

Path	Type	Signal/TAG-No.	Destination	Comment	Rang.
51					
52					
53					
54					
55					
56					
57					
58					
59					
60					
61					
62					
63					
64					
65					
66					
67					
68					
69					
70					
71					
72					
73					
74					
75					
76					
77					
78	1	Step12_US15013	to page no. 55/12	Open butterfly valve	
79				BTV 15013	
80	1	Step12_US15021	to page no. 60/12	Open butterfly valve	
81				BTV 15021	
82	1	Step12_US15026	to page no. 64/24	Open butterfly valve	
83				BTV 15026	
84	1	Step12_US15028	to page no. 65/13	Open butterfly valve	
85				BTV 15028	
86	1	Waitingtime12	to page no. 39/5	Time over	
87	1		to page no. 46/17		
88	1	Minwaitingtime12	to page no. 39/15	Time over	
89					
90	1	KC15001_TM12	Alarm	"Check time over"	
91					
92					
93					
94					
95					
96					
97	1	Step12	to page no. 39/2	Depress_A	
98	1		to page no. 45/29		

JOB NO.	FILE NO.	REV.	DATE	REVISIONS	BY	CHKD.
		Rev3	08.6.07	"as built"	Frohn	Stippich
		Rev2	02.2.06		Frohn	Eichler

PROJECT NAME: ASU KOSICE

PLANT PART: MOL SIEVE STATION

AIR LIQUIDE

Air Liquide AGS GmbH
Fütingsweg 34
47805 Krefeld

DRAWING NAME: MOL SIEVE STATION DEPRESSURISATION ADSORBER A

SIZE: A3 — FUNKTION DIAGRAM

DRWG. NO.: K70101_038.dwg

PROJ. NO.: K70101

REPLACES: REPLACED BY: BASED:

DATE: 17.06.2005
AUTHOR: Frohn
CHECK: Eichler
STD.:

Rang.	Comment	Origin	Type	Signal-/TAG-No.	Path
					1
	Depress_A	from page no. 38/97	1	Step12	2
					3
					4
	Time over	from page no. 38/86	1	Waitingtime12	5
					6
	Next step	Software push button	1	HS 15003	7
					8
	Enabling after start	from page no. 22/85	1	MS_Start_Ok	9
					10
	Adsorber A	from page no. 46/92	1	PL 15012	11
					12
	Stop sequence	Software button	1	HS 15002	13
					14
	Time over	from page no. 38/88	1	Minwaitingtime12	15
					16
					17
	Next step	Software push button	1	HS 15003	18
					19
	Step without	Hand control	1	HS 15005	20
	conditions				21
	Switch time valves	from page no. 45/89	1	MS_switch_time	22
					23
					24
					25
					26
					27
					28
					29
					30
					31
					32
					33
					34
					35
					36
					37
					38
					39
					40
					41
					42
					43
					44
					45
					46
					47

Function

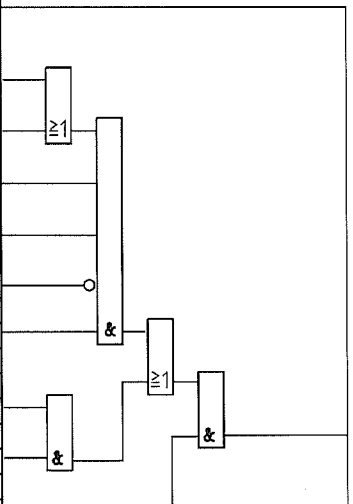

Step 13

Preparation heating adsorber A

NS	US 15013	1
NS	US 15021	2
NS	US 15026	3
NS	US 15012	4
NS	US 15014	5
NS	US 15028	6
T	Waiting time = 125 sec	7
T	Minwaitingtime = 10 sec	8
T	Monitoring = 135 sec	9

The times are set by MS_Start_Ok = 0 on the initial value

Path	Type	Signal/TAG-No.	Destination	Comment	Rang.
51					
52					
53					
54					
55					
56					
57					
58					
59					
60					
61					
62					
63					
64					
65					
66					
67					
68					
69					
70					
71					
72					
73					
74					
75					
76					
77					
78					
79					
80	1	Step13_US15013	to page no. 55/13	Open butterfly valve	
81				UK 15013	
82	1	Step13_US15021	to page no. 60/13	Open butterfly valve	
83				UK 15021	
84	1	Step13_US15026	to page no. 64/25	Open butterfly valve	
85				UK 15026	
86	1	Step13_US15012	to page no. 54/10	Open butterfly valve	
87				UK 15012	
88	1	Step13_US15014	to page no. 56/11	Open butterfly valve	
89				BTV 15014	
90	1	Step13_US15028	to page no. 65/14	Open butterfly valve	
91				UK 15028	
92	1	Waitingtime13	to page no. 40/5	Time over	
93					
94	1	Minwaitingtime13	to page no. 40/15	Time over	
95					
96	1	KC15001_TM13	Alarm	"Check time over"	
97	1	Step13	to page no. 40/2	PreHeat_A	
98	1		to page no. 45/31		

JOB NO.	FILE NO	REV.	DATE	REVISIONS	BY	CHKD.
		Rev3	08.6.07	"as built"	Frohn	Stippich
		Rev2	02.2.06		Frohn	Eichler

PROJECT NAME: ASU KOSICE

PLANT PART: MOL SIEVE STATION

AIR LIQUIDE

Air Liquide AGS GmbH
Fütingsweg 34
47805 Krefeld

DRAWING NAME: MOL SIEVE STATION
PREPARATION HEATING ADSORBER A

SIZE: A3 — FUNKTION DIAGRAM

DRWG. NO.: K70101_039.dwg

PROJ. NO.: K70101

REPLACES: REPLACED BY: BASED:

DATE: 17.06.2005
AUTHOR: Frohn
CHECK: Eichler
STD.: